Congressional Research Service
Informing the legislative debate since 1914

Methane: An Introduction to Emission Sources and Reduction Strategies

name redacted, Coordinator
Analyst in Environmental Policy

name redacted
Specialist in Agricultural Conservation and Natural Resources Policy

name redacted
Specialist in Environmental Policy

name redacted
Information Research Specialist

February 4, 2016

Congressional Research Service
7-....
www.crs.gov
R43860

CRS REPORT
Prepared for Members and
Committees of Congress

Summary

The Obama Administration's Strategy to Reduce Methane Emissions

On June 25, 2013, President Obama announced a national "Climate Action Plan" (CAP) to reduce emissions of carbon dioxide (CO_2) and other greenhouse gases (GHGs), as well as to encourage adaptation to expected climate change. One of the more significant initiatives within the CAP focused on the control of methane emissions, a potent short-lived climate pollutant. It called for the U.S. Environmental Protection Agency (EPA) and the Departments of Agriculture, Energy, Interior, Labor, and Transportation to develop a comprehensive interagency "Strategy to Reduce Methane Emissions." The Strategy, released on March 28, 2014, committed to steps to cut methane emissions by 40%-45% from 2012 levels by 2025 through both voluntary actions and agency rulemaking. It also outlined the Administration's efforts to improve the measurement and assessment of these emissions.

Perspectives on the Strategy

Many of the affected industries (including some in the agriculture, fossil energy, and waste management sectors) have raised concerns over federal proposals requiring more stringent controls. They argue that further regulation of emissions would be either insupportable from an economic standpoint or ineffective at providing significant health and environmental benefits. Some industry stakeholders contend that they are already doing everything feasible to capture and reuse methane emissions (for requisite safety and economic reasons) and that state and local authorities—who share a closer understanding of the industries' specific circumstances—are best equipped to oversee and enforce emission reduction efforts within their jurisdictions.

Health and environmental advocates, however, contend that the Strategy and its proposed rulemakings fall short. They argue that methane emissions can jeopardize worker safety, lead to ground-level ozone formation (commonly referred to as "smog"), and act as a potent GHG. Recent events in the United States (e.g., the rise in domestic oil and natural gas production, the encroachment of domestic oil and natural gas production on new or more populated areas, and the revitalization of the petrochemical manufacturing sector) have led these stakeholders to suggest the need for more enforceable standards.

The Role of Methane

Behind it all is methane—the world's simplest hydrocarbon and the primary component of natural gas. It is released into the atmosphere by both natural sources (such as wetlands and wildfires) and human activities (such as oil and natural gas systems, coal mines, landfills, and the raising of livestock). When captured, methane can be used as either a fuel or a chemical feedstock, with many advantages over other fossil fuels. (E.g., it is more versatile and less polluting and provides energy security benefits.) Its dual nature as both a pollutant and a commodity makes efforts to control emissions potentially beneficial to both the environment and the economy.

For these reasons, as far back as the 1970s, the federal government has sought policies to help reduce, capture, and reuse methane emissions. Whether strategies to control emissions are effective and cost-efficient for a given industry may depend upon a number of factors, including the nature and extent of the emissions, the technology available for capture, and the market price for the recovered products. In this way, the cost-benefit considerations are similar to those of energy efficiency efforts, wherein high up-front investments and other market barriers, if confronted by producers, may be offset over time. Recent federal policies have included a variety of funding programs for research and technology development as well as voluntary programs and tax incentives for industry. Currently, methane emissions are addressed directly by two federal

rules: one on new municipal landfills and another on federal oil and gas leases. Since the Strategy's release, the Administration has proposed several additional rules—on oil and natural gas systems, coal mines, and municipal landfills. These proposals—as well as a variety of legislative efforts in Congress—attest to the continued interest in an appropriate policy response to the issue of methane emissions.

Contents

Introduction 1
Issues for Congress 3
Legislative Initiatives 5
Administrative Initiatives 6
The Obama Administration's Strategy to Reduce Methane Emissions 7
Methane: A Primer 8
Emissions 9
Historical Trends 10
Source Sectors and Mitigation Activities 13
Agriculture Sector 13
Fossil Energy Sector 15
Waste Management Sector 20
Issues in Measurement 22
Conclusion 25

Figures

Figure 1. U.S. Methane Emissions: Sources 10
Figure 2. U.S. Methane Emissions: Historical Trends by Source Sector 11
Figure 3. U.S. Methane Emissions: Historical Trends by Source Category 12
Figure 4. Natural Gas Industry Sectors 17

Tables

Table A-1. A Selection of Recent Legislative Proposals with Methane Components 27

Appendixes

Appendix A. Recent Legislative Proposals 27
Appendix B. Recent Executive Branch Initiatives 40

Contacts

Author Contact Information 42
Acknowledgments 43

Introduction

Methane is the world's simplest hydrocarbon, with a chemical formula CH_4 (one atom of carbon and four atoms of hydrogen). It is gaseous under normal atmospheric conditions and is commonly produced through the decomposition of organic materials in the absence of oxygen. It is released into the atmosphere by natural sources such as wetlands, oceans, sediments, termites, volcanoes, and wildfires,[1] as well as human activities such as oil and natural gas systems, coal mines, landfills, wastewater treatment facilities, and the raising of livestock.

Methane, when captured, can be used as either a fuel or a chemical feedstock. When used as a fuel—for example, methane is the primary component of natural gas[2]—it has many advantages over other hydrocarbons (e.g., coal and oil). Methane is more versatile: It can heat homes, fuel stoves, run vehicles, fire power plants, and, when liquefied, be exported to support the energy needs of U.S. allies and trading partners. Methane is cleaner-burning: It emits, on average, about half as much CO_2 as coal and one-quarter less than oil when consumed in a typical electric utility plant.[3] Further, its combustion emits no mercury (a persistent, bioaccumulative neurotoxin), virtually no particulate matter or sulfur dioxide, and less nitrogen oxides, per unit of combustion, than either coal or oil. Recent expansion in natural gas production, primarily as a result of improved technologies (e.g., hydraulic fracturing and directional drilling)[4] used on unconventional resources (e.g., shale, tight sands, and coalbed methane),[5] has made methane an increasingly significant component in the energy supply and security of the United States.

When used as a chemical feedstock, methane is a manufacturing component for a variety of household and industrial products including plastic, fertilizer, antifreeze, and fabrics. Abundant and economical supplies of methane may serve arguably to reinvigorate the U.S. petrochemical

[1] For a discussion of the sources of naturally occurring methane, see U.S. Environmental Protection Agency (EPA), *Methane and Nitrous Oxide Emissions from Natural Sources*, EPA 430-R-10-001, Washington, DC, April 2010.

[2] Natural gas extracted through drilling operations by the oil and gas industry is commonly composed of the following: methane, 70%-90%; ethane, propane, and butane, 0%-20%; carbon dioxide, 0%-8%; oxygen, 0%-0.2%; nitrogen, 0%-5%; hydrogen sulfide, 0%-5%; and rare gases (e.g., A, He, Ne, Xe) in trace amounts. See the Natural Gas Supply Association's educational website, http://naturalgas.org/overview/background/, for further discussion of composition.

[3] The stated reduction values are estimates based on carbon dioxide emitted per unit of energy generated. For a more detailed discussion, see CRS Report R44090, *Life-Cycle Greenhouse Gas Assessment of Coal and Natural Gas in the Power Sector*, by (name redacted) .

[4] Hydraulic fracturing (hydrofracking, fracking, or fracing) is commonly defined as an oil or gas well completion process that directs pressurized fluids typically containing any combination of water, proppant, and any added chemicals to penetrate tight rock formations, such as shale or coal formations, in order to stimulate the oil or gas residing in the formation and subsequently requires high-rate, extended flowback to expel fracture fluids and solids. The National Petroleum Council estimates that hydraulic fracturing will account for nearly 70% of natural gas development within the next decade. See National Petroleum Council, *Prudent Development: Realizing the Potential of North America's Abundant Natural Gas and Oil Resources*, September 15, 2011. For more discussion on this technology, see the section on "Hydraulic Fracturing" in CRS Report R42333, *Marcellus Shale Gas: Development Potential and Water Management Issues and Laws*, by (name redacted) et al.

[5] These unconventional resources are commonly defined as follows: Tight sands gas is natural gas trapped in low-permeability and nonporous sandstones. Shale gas is natural gas trapped in shale deposits, a very fine-grained sedimentary rock that is easily breakable into thin, parallel layers. Coalbed methane is natural gas trapped in coal seams. These resources are referred to as "unconventional" because, in the broadest sense, they are more difficult and/or less economical to extract than "conventional" natural gas, usually because the technology to reach them had not until recently been developed fully or had been too expensive. For a more detailed discussion of these definitions, see the Natural Gas Supply Association's website, http://naturalgas.org/overview/unconventional-ng-resources/.

sector, bringing manufacturing industries back on shore and aiding in the creation of domestic jobs and economic development.[6]

For these reasons, many in both the public and private sectors have advocated for the increased production and use of methane (via natural gas extraction or other capture technologies) and have hailed it as a potential "cost-effective bridge" to a less polluting and lower GHG-intensive economy.[7] This position has been supported by many Members of Congress as well as the Obama Administration.[8]

Methane, however, when released or allowed to escape into the atmosphere (commonly referred to as "vented" and "fugitive" emissions, respectively), has adverse impacts on human health, safety, and the environment. The U.S. Occupational Safety and Health Administration lists methane as both an asphyxiant and an explosive, as increased concentrations in local settings can jeopardize worker safety.[9] Further, the U.S. Environmental Protection Agency (EPA) classifies methane as both a precursor to ground-level ozone formation[10] (commonly referred to as "smog") and a potent greenhouse gas (GHG), albeit with a shorter atmospheric life than CO_2.[11] Methane's effect on climate change is up to 34 times greater than that of CO_2 when averaged over a 100-year time period and even greater when considered over the first 20 years after it is emitted.[12] An increase in emissions may counteract some of the environmental benefits that the U.S. economy has to gain by switching from coal or oil to natural gas and other sources of methane. For these reasons, some stakeholders, including some Members of Congress, have called for increased controls on methane emissions in several sectors of the economy, including oil and natural gas production, coal mining, industrial processes, and agriculture.

In many cases, efforts to control air pollution can compete against the economic considerations of the affected industries. However, in methane's case, its dual nature as both a commodity and a pollutant provides a unique set of incentives. Under certain conditions, the value of fugitive methane and other byproducts that can be recovered and sold at market may be able to offset the

[6] "Growth in production of dry natural gas and natural gas plant liquids contributes to the expansion of several manufacturing industries (such as bulk chemicals and primary metals) and the increased use of [natural gas] feedstocks in place of petroleum-based naphtha feedstocks." U.S. Energy Information Administration, *Annual Energy Outlook 2015*, April 14, 2015.

[7] Ernest J. Moniz et al., *The Future of Natural Gas: An Interdisciplinary MIT Study*, June 25, 2010.

[8] In his 2012 State of the Union speech, President Obama stated, "We have a supply of natural gas that can last America nearly 100 years, and my administration will take every possible action to safely develop this energy." President Barack Obama, "Remarks by the President in State of the Union Address," Washington, DC, January 24, 2012.

[9] U.S. Department of Labor, Occupational Safety and Health Administration, *Chemical Sampling Information, Methane.*

[10] Health effects associated with exposure to ozone include premature death, heart failure, chronic respiratory damage, and premature aging of the lungs. Ozone may also exacerbate existing respiratory illnesses such as asthma and emphysema. See EPA, *Regulatory Impact Analysis: Final National Ambient Air Quality Standards for Ozone*, July 2011. While methane is a precursor to ground-level ozone formation, it is less reactive than other hydrocarbons. For further discussion on methane as an ozone precursor, see section "Methane: A Primer."

[11] As a GHG, methane emitted into the atmosphere absorbs terrestrial infrared radiation, which contributes to increased global warming and continuing climate change. For further discussion on methane as a GHG, see section "Methane: A Primer." For further discussion on climate change and its potential impacts, see CRS Report RL34266, *Climate Change: Science Highlights*, by (name redacted).

[12] Here, as elsewhere in the report, GHGs are quantified using a unit measurement called carbon dioxide equivalent (CO_2e), wherein gases are indexed and aggregated against one unit of CO_2. This indexing is referred to as the Global Warming Potential (GWP) of the gas. For more discussion on GWP, see section "Methane: A Primer."

cost of their capture. Further, the value of these recovered products during oil and gas extraction could contribute to increased royalty payments to state and federal governments.

The difficulty, however, is that methane emissions are not always easy to capture. Methane, unlike some other pollutants (e.g., sulfur dioxide or CO_2), is not commonly emitted in a concentrated stream from industrial processes. Rather, it is released into the atmosphere through dispersion, leaks, vents, accidents, and ruptures. In this way, methane emissions are most similar to those of volatile organic compounds (VOCs), both in manner and control.[13] Efforts to capture or abate these emissions are generally more difficult and costly than for other pollutants. Whether recovery of methane is profitable for producers may depend upon a number of factors, including the nature and extent of the release, the technology available for capture, and the market price for the recovered products. In this way, the cost-benefit consideration of methane capture becomes very similar to that of energy efficiency efforts, wherein high up-front investments and other market barriers, if confronted by producers, may have the potential to be offset over time.

This report examines the many facets of methane: from commodity to coproduct to byproduct to waste. It begins with a survey of past and present attempts by Congress and the executive branch to address methane emissions for the purposes of energy policy and pollution control. It then provides a general overview of methane before focusing on specific sectors of the economy in order to (1) characterize different sources of methane and the data available on their emissions; (2) discuss current practices, opportunities, and challenges for emission controls; and (3) outline recent initiatives proposed by Congress and the Administration.

Issues for Congress

Through the years, the federal government has sought policies to control methane emissions for a variety of economic, environmental, and public health and safety reasons. Some justifications for federal involvement have included the following:

1. Promoting domestic energy production and energy independence,
2. Protecting the property rights of mineral owners (including federal resources and associated royalties to the American taxpayer),
3. Assuring the operational safety of employees who work with or near significant emission sources, and
4. Safeguarding the general population from air pollution that may reasonably be anticipated to endanger public health or welfare.

Initially, policies to capture methane emissions were motivated in part by the Organization of Arab Petroleum Exporting Countries oil embargo of 1973 and the subsequent calls for U.S. energy independence. During this time, the United States saw natural gas and other sources of methane as a potential alternative to imported crude oil. Efforts to incentivize the capture of methane and use it as an alternative fuel were proposed by both Congress and the Administration across the full range of commercial sectors. They included a variety of funding programs for research and technology development, voluntary guidelines and tax incentives for industry, and/or rules for mineral rights lessees on federal lands.

[13] Like methane, VOCs are difficult to capture because of the diffuse nature of their releases. Also, leak prevention and recovery of VOCs may pay dividends in reducing product losses. Because the value of VOCs is highly variable, state and federal regulatory programs have required control of VOC emissions, even when the product value does not result in a net cost savings to the potential emitter (e.g., National Emission Standards for Hazardous Air Pollutants, vehicle standards, and State Implementation Plans for ozone precursor controls).

As an understanding of methane's role in ozone formation and climate change grew during the 1990s, some state and federal authorities turned their attention to reducing methane emissions as a form of pollution control. Once again, the key policy tools used for pollution abatement took the form of voluntary guidelines and tax incentives. However, in a few instances, where reductions in other pollutants could serve the co-benefit of aiding in the reduction of methane, regulatory emission standards were proposed and/or promulgated. In the 2000s, as Congress considered comprehensive market-based strategies to reduce GHG emissions across the entire U.S. economy, more innovative proposals for methane reduction became prevalent. Methane capture was commonly suggested as an "offset" credit for higher GHG-emitting industries, as the net costs of reducing methane emissions, in some instances, could be more favorable than directly controlling for CO_2 emissions.

Recent events in the United States (e.g., the rise in domestic oil and natural gas production, its encroachment on new or more populated areas, and the revitalization of the petrochemical manufacturing sector) have led some stakeholders to suggest the need for more enforceable standards. At the state level, Colorado, Wyoming, Ohio, and California have recently promulgated or proposed rules to control for methane emissions from their oil and gas sectors.[14] At the federal level, two methane-emitting source categories are addressed directly by regulations. They include (1) EPA's 1996 standards on municipal landfills,[15] and (2) the Bureau of Land Management's (BLM) 1980 notice on venting and flaring for oil and gas leases on federal lands.[16]

EPA has the authority to regulate methane emissions as both an ozone precursor and a GHG under the Clean Air Act (CAA).[17] Currently, EPA has no standards in place to regulate methane as an ozone precursor, and it has shown a disinclination for doing so in the past.[18] The agency's authority to regulate methane as a GHG was upheld by the Supreme Court's 2007 decision in *Massachusetts v. EPA*,[19] which determined that GHGs fall under the definition of "air pollutant" as used in the CAA. Following this decision, EPA determined that six GHGs, including methane, endangered public health and welfare[20] and issued several rules focused primarily on CO_2.[21] Recently, under the directive of the Obama Administration's 2014 "Strategy to Reduce Methane

[14] See discussion under section "Fossil Energy Sector."

[15] EPA, "Standards of Performance for New Stationary Sources and Guidelines for Control of Existing Sources: Municipal Solid Waste Landfills," 61 *Federal Register* 9905, March 12, 1996. The rule states that "the emissions of concern are non-methane organic compounds (NMOC) and methane" and that "methane emissions contribute to global climate change and can result in fires or explosions when they accumulate in structures on or off the landfill site."

[16] U.S. Department of the Interior, "Notice to Lessees and Operators of Onshore Federal and Indian Oil and Gas Leases (NTL-4A): Royalty or Compensation for Oil and Gas Loss," January 1, 1980.

[17] Clean Air Act, as amended, 42 U.S.C. 7401 et seq. For a summary of the CAA and EPA's air and radiation activities and its authorities, see EPA's website and CRS Report RL30853, *Clean Air Act: A Summary of the Act and Its Major Requirements*, by (name redacted) and (name redacted) .

[18] While methane is a precursor to ground-level ozone formation, it is less reactive than other hydrocarbons. Thus, EPA has officially excluded it from the definition of regulated hydrocarbons called volatile organic compounds (VOCs). See EPA, *Conversion Factors for Hydrocarbon Emission Components*, EPA-420-R-10-015, July 2010.

[19] Massachusetts v. EPA, 549 U.S. 497 (2007).

[20] EPA, "Endangerment and Cause or Contribute Findings for Greenhouse Gases," 74 *Federal Register* 66496, December 15, 2009. The "endangerment" language in Sections 108, 111, 211, 213, 115, and 231 provides fundamental authorities. Also, Section 111(d) provides authority to control GHG emissions from existing sources, and Section 111(b) and (e) provide similar authorities for new sources.

[21] For example, EPA and National Highway Traffic Safety Administration, "2017 and Later Model Year Light-Duty Vehicle Greenhouse Gas Emissions and Corporate Average Fuel Economy Standards; Final Rule," 77 *Federal Register* 62623, October 15, 2012; and EPA, "Carbon Pollution Emission Guidelines for Existing Stationary Sources: Electric Utility Generating Units; Proposed Rule," 79 *Federal Register* 34829, June 18, 2014.

Emissions"[22] (discussed in further detail in the remainder of this report), EPA proposed a suite of voluntary and regulatory programs to address methane emissions across a range of industrial sectors. Additionally, the Departments of Agriculture, Energy, Interior, Labor, and Transportation have some authorities to monitor, give guidance for, and make rules to control for methane emissions. As with EPA, some of these agencies have also proposed initiatives under the directive of the Administration's Strategy.

Many affected industries—specifically those in the energy and the agricultural sectors—have raised concerns over increased controls. They argue that further regulation would be either insupportable from an economic standpoint or ineffective at providing significant health and environmental benefits. Some industry stakeholders contend that they are already doing everything feasible to capture and reuse methane emissions (for requisite safety and economic reasons) and that state and local authorities—who share a closer understanding of an industry's specific circumstances—are best equipped to oversee and enforce any emission reduction efforts within their jurisdictions.

Efforts by the federal government to incentivize the reduction, capture, and reuse of methane—including the Obama Administration's Strategy—are summarized in the following two sections: "Legislative Initiatives" and "Administrative Initiatives." Further, **Table A-1** of **Appendix A** provides a detailed list of recent congressional proposals both in support of and in opposition to increased methane emission controls. Finally, **Appendix B** provides a selected chronology of recent executive branch initiatives.

Legislative Initiatives

The U.S. Congress has pursued policies in support of methane reduction since the 1970s. Legislation aimed at capturing methane emissions from agricultural activities and promoting the use of the recovered gas dates back, at least, to the 94th Congress.[23] Similar bills targeting emissions from coal mines and municipal landfills were introduced in the 96th and 97th Congresses, respectively.[24] These efforts often promoted methane as an alternative fuel source, specifically as a replacement for imported crude oil. Legislation addressing methane's role as an air pollutant (e.g., as a GHG) reaches back to the 101st Congress, wherein several bills were introduced with specific methane control provisions. These included one in 1989 by then-Senator Al Gore to analyze "the contribution of methane to global climate change, the sources and sinks of methane, and the methods of controlling emissions of methane."[25] A similar set of studies was codified by the Clean Air Act Amendments of 1990, which required EPA to report on the "activities, substances, processes, or combinations thereof that could reduce methane emissions and that are economically and technologically justified."[26] Methane reduction was also included

[22] Executive Office of the President (EOP), "Climate Action Plan: Strategy to Reduce Methane Emissions," March 2014.

[23] For example, the Family Farm Energy Conversion Act (S. 3714).

[24] For example, the Underground Coal Gasification and Unconventional Gas Research, Development and Demonstration Act (S. 2774) and the bill "to provide for the development and improvement of the recreation facilities and programs of Gateway National Recreation Area through the use of funds obtained from the development of methane gas resources within the Fountain Avenue Landfill site by the City of New York" (S. 2218) ().

[25] World Environment Policy Act of 1989 (S. 201).

[26] Clean Air Act Amendments of 1990 (S. 1630,). The findings were reported in EPA, *Anthropogenic Methane Emissions in the United States: Estimates for 1990, Report to Congress*, EPA 430-R-93-003, 1993, which was expanded and replaced by EPA, *U.S. Methane Emissions 1990-2020: Inventories, Projections, and Opportunities for Reductions*, EPA 430-R-99-013, 1999.

as a qualifying activity in market-based GHG control proposals as far back as the 101st Congress.[27]

Recent congressional interest continues to focus on methane's role as a GHG, with legislative efforts aimed at both supporting EPA's authority to regulate methane emissions and revoking it. Recent bills and amendments in the 114th Congress have proposed several different policy tools as strategies for reduction. They include (1) providing economic incentives (e.g., tax benefits) for activities that capture and use fugitive gas (e.g., H.R. 2142, the Capitalizing on American Methane Act of 2015), (2) authorizing the Administration or a specific agency to investigate or directly regulate methane emissions (e.g., H.R. 508, the SUPER Act of 2015), and (3) providing a market-based mechanism (e.g., fee) to incentivize methane reduction (e.g., S. 1548, the American Opportunity Carbon Fee Act of 2015).

Conversely, many bills in recent Congresses have aimed to remove the executive branch's authority to regulate methane emissions based predominantly on arguments for economic growth and employment. Some examples of these efforts include (1) amending the CAA to remove "methane" and other GHGs from the definition of "air pollutant" (e.g., H.R. 1806, America COMPETES Reauthorization Act of 2015) and (2) prohibiting appropriated funds from being used by agencies to regulate methane (e.g., H.R. 2822, Department of the Interior, Environment, and Related Agencies Appropriations Act, 2016).

For a selected list of recent bills and amendments that address methane, see **Table A-1** of **Appendix A**.

Administrative Initiatives

Historically, many of the methane control initiatives administered by the federal government have taken the form of either research funding or voluntary public-private partnerships with industry. Federal funding has been provided for the research and development of new technologies aimed at enabling more cost-effective emission reductions across various sectors of the economy. Offices that have provided financial and technical assistance in the past include the Department of Agriculture (USDA) Conservation Innovation Grants, Environmental Quality Incentive Program, Rural Energy for America Program, Bioenergy Program for Advanced Biofuels, and Biorefinery Assistance Program; the Department of Energy (DOE) Office of Fossil Fuels, Office of Energy Policy and Systems Analysis, and Section 1703 Loan Guarantee Program; the Department of Labor (DOL) Mine Safety and Health Administration; the Department of Transportation (DOT) Pipeline and Hazardous Materials Safety Administration, the EPA Office of Air and Radiation; and the Department of the Interior (DOI) BLM.

Similarly, voluntary partnerships managed by federal agencies have aimed to leverage the resources of the federal government to assist the private sector in overcoming the economic barriers to methane capture. They include the EPA's Natural Gas STAR Program and the Coalbed Methane Outreach Program for the energy sector, EPA/USDA's AgSTAR Program for the agricultural sector, EPA's Landfill Methane Outreach Program for the waste sector, and EPA's Global Methane Initiative for international activities.[28] The goals of these programs are to (1) raise awareness of emission levels and the value of lost fuel, (2) provide information and training on new technologies and practices, and (3) discuss the barriers embedded in traditional

[27] CO_2 Offsets Policy Enabling Act of 1990 (H.R. 5966).

[28] These programs are discussed in more detail in subsequent sections of this report.

operations, limited infrastructure, and uncertain investment climates. As with many voluntary initiatives, these programs have returned mixed results.[29]

The Obama Administration's Strategy to Reduce Methane Emissions

On June 25, 2013, President Obama refocused his Administration's efforts to address GHG emissions with the release of the "Climate Action Plan" (CAP).[30] Federal activities in support of methane emission reductions became one of the cornerstones of the CAP. During its presentation, the President stated that "curbing emissions of methane is critical to our overall effort to address global climate change." Many stakeholders have suggested that the Administration's recent GHG reduction targets, offered under the U.S. commitments to the United Nations Framework Convention on Climate Change,[31] would be unattainable without significant methane controls.[32] The CAP set guidelines for EPA and the Departments of Agriculture, Energy, Interior, Labor, and Transportation to develop a comprehensive interagency methane strategy,[33] which was released on March 28, 2014, under the title "Strategy to Reduce Methane Emissions."

Key initiatives of the Strategy include the following:

1. **Agriculture.** A joint USDA, EPA, and DOE "Biogas Roadmap" outlining voluntary strategies to accelerate adoption of methane digesters and other cost-effective technologies to reduce U.S. dairy sector GHG emissions by 25% by 2020 (released on August 1, 2014).[34]
2. **Petroleum and Natural Gas.**
   - An EPA proposal[35] to (1) build on the 2012 New Source Performance Standards (NSPS) for VOC emissions[36] to address methane emissions from new and modified activities and equipment in the sector uncovered by the previous rule, (2) extend VOC reduction requirements to existing oil and gas sources in ozone nonattainment areas and states in the Ozone Transport Region, and (3) expand voluntary efforts under the Natural Gas STAR program (released August 18, 2015).
   - A BLM proposal to update standards to reduce venting and flaring from oil and gas production on public lands (released January 22, 2016).[37]

[29] For a discussion of the performance of these and other voluntary programs, see the subsequent sections of this report on the respective industry sectors.

[30] EOP, The President's Climate Action Plan, June 2013. For a summary of the CAP, see CRS Report R43120, *President Obama's Climate Action Plan*, coordinated by (name redacted).

[31] For a discussion of the pledged commitments to the UNFCCC, see CRS Report R44092, *Greenhouse Gas Pledges by Parties to the United Nations Framework Convention on Climate Change*, by (name redacted).

[32] See, as one example, projections made by the Climate Action Tracker, an independent scientific analysis produced by four research organizations, including Climate Analytics, Ecofys, NewClimate Institute, and the Potsdam Institute for Climate Impact Research, http://climateactiontracker.org/countries/usa.html.

[33] CAP, p. 10.

[34] U.S. Department of Agriculture, "Fact Sheet: Biogas Opportunities Roadmap: Voluntary Actions to Reduce Methane Emissions, Increase Energy Independence and Grow the Economy," August 1, 2014.

[35] EPA, "Oil and Natural Gas Sector: Emission Standards for New and Modified Sources, Proposed Rule," 80 *Federal Register* 56593, September 18, 2015.

[36] EPA, "Oil and Natural Gas Sector: New Source Performance Standards and National Emission Standards for Hazardous Air Pollutants Reviews, Final Rule," 77 *Federal Register* 49489, August 16, 2012.

[37] BLM, "Waste Prevention, Production Subject to Royalties, and Resource Conservation: Proposed Rule," January 22, (continued...)

- Several Department of Transportation Pipeline and Hazardous Materials Safety Administration (PHMSA) proposals for natural gas pipeline safety standards.[38]
- DOE-convened roundtables, as part of the Quadrennial Energy Review, to identify "downstream" methane reduction opportunities (the summary of which was released on July 29, 2014).[39]

3. **Coal Mines.** A BLM Advance Notice of Proposed Rulemaking (ANPRM) to gather public input on the development of a program for the capture and sale or disposal of waste mine methane on lands leased by the federal government (released on April 28, 2014).[40]
4. **Landfills.** An EPA proposal to update standards to reduce methane from new and existing municipal solid waste landfills (released on August 14, 2015).[41]
5. **Improving Methane Measurement.** Data quality improvement, including developing new measurement technologies, addressing areas of higher uncertainty in bottom-up inventories, and enhancing top-down modeling and monitoring based on direct measurement of atmospheric concentrations.

These initiatives are summarized in greater detail, by sector, in the remainder of this report. For a selected chronology of executive branch initiatives related to the White House's Strategy, see **Appendix B**.

Methane: A Primer

Methane is both a precursor to ground-level ozone formation and a potent GHG. As a precursor to ground-level ozone formation, methane reacts with nitrogen oxides in the presence of sunlight to form what is commonly referred to as smog. Methane, however, is generally less reactive than other hydrocarbons. For this reason—and at this time—EPA has excluded it from the definition of regulated hydrocarbons called volatile organic compounds (VOCs).[42]

As a GHG, methane emitted into the atmosphere absorbs terrestrial infrared radiation, which contributes to increased global warming and continuing climate change. According to the Intergovernmental Panel on Climate Change (IPCC) *Fifth Assessment Report 2013* (AR5), in 2011, methane concentrations in the atmosphere exceeded preindustrial levels by 150%. Further, they contributed about 16% to global warming due to anthropogenic GHG sources, making methane the second-leading climate forcer after CO_2 globally.[43] While the perturbation lifetime for methane is only 12 years (compared to CO_2's, which is considerably longer and does not undergo a simple decline over a single predictable timescale), its immediate impacts are

(...continued)

2016.

[38] For an update on PHMSA pipeline rulemaking, see http://www.phmsa.dot.gov/pipeline/regs.

[39] DOE, "Factsheet: An Initiative to Help Modernize Natural Gas Transmission and Distribution Infrastructure," July 29, 2014.

[40] BLM, "Waste Mine Methane Capture, Use, Sale, or Destruction," 79 *Federal Register* 23923, April 28, 2014.

[41] EPA, "Standards of Performance for Municipal Solid Waste Landfills, Proposed Rule," August 14, 2015.

[42] EPA, *Conversion Factors for Hydrocarbon Emission Components*, Washington, DC, EPA-420-R-10-015, July 2010.

[43] IPCC, *Climate Change 2013: The Physical Science Basis*, Working Group I Contribution to the Fifth Assessment Report of the Intergovernmental Panel on Climate Change.

significantly greater (see **Text Box**). For this reason, methane is commonly characterized as a "short-lived climate forcer," along with black carbon and various hydrofluorocarbons (HFCs).

Global Warming Potential

The climate change impacts of methane are commonly compared to those of CO_2 through the use of an index referred to as "global warming potential" (GWP): a measure of the total energy that a gas absorbs over a particular period of time compared to CO_2. Key factors affecting the GWP of any given gas include its average atmospheric lifetime and the ability of that molecule to trap heat. While methane is a highly potent GHG for a short period of time after its initial release, its capacity to trap heat dissipates after approximately 12 years. By comparison, CO_2's perturbation lifetime is considerably longer and does not undergo a simple decline over a single predictable timescale. Instead, the excess atmospheric carbon from CO_2 emissions mixes into the oceans and biosphere (e.g., plants) over a period of a few hundred years, and then it is slowly removed over hundreds of thousands of years as it is gradually incorporated into carbonate rocks.

As recently as November 2013, EPA reported GWP values for methane that were accepted by parties to the United Nations Framework Convention on Climate Change (UNFCCC) as they were presented in the IPCC *Second Assessment Report 1995* (SAR). The SAR lists methane's GWP as 21 over a 100-year time horizon. (That is, the same amount of methane emissions by mass is approximately 21 times more potent than CO_2 emissions when averaged over a 100-year time horizon.) EPA recently adopted GWP values for methane that were accepted by parties to the UNFCCC as they were presented in the IPCC *Fourth Assessment Report 2007 (*AR4).[44] The AR4 lists methane's GWP as 25 and 72 over a 100-year and a 20-year time horizon, respectively. EPA's most recent *Inventory of U.S. Greenhouse Gas Emissions and Sinks: 1990-2013*, released in April 2015, uses the AR4 values. AR5, released in September 2013, lists methane's GWP as 28 and 84 over a 100-year and a 20-year time horizon, respectively, but these values have not yet been accepted officially by parties to the UNFCCC. Further, the AR5 reports methane's GWP inclusive of methane's indirect effects on aerosols as 34 and 86 over a 100-year and a 20-year time horizon, respectively.

The data in this report are based on EPA's 2015 Inventory and the IPCC AR4 GWP values for methane.

Emissions

According to EPA, methane is the second-most prevalent GHG emitted by the United States (behind CO_2), and in 2013 it accounted for 636.3 million metric tons of CO_2 equivalent, or about 9.5% of all domestically produced emissions from human activities (see **Figure 1**).[45] Some academic studies have put these emissions higher.[46] Of the total, over 40% was emitted from sources in the energy production sector, over 35% from sources in the agricultural sector, and over 20% from sources in the waste management sector (see **Figure 2**).

[44] See IPCC, *Climate Change 2007: The Physical Science Basis*, Working Group I Contribution to the Fourth Assessment Report of the Intergovernmental Panel on Climate Change, and U.S. Environmental Protection Agency, "2013 Revisions to the Greenhouse Gas Reporting Rule and Final Confidentiality Determinations for New or Substantially Revised Data Elements," 78 *Federal Register* 71903, November 29, 2013.

[45] As calculated over 100 years. EPA, *Inventory of U.S. Greenhouse Gas Emissions and Sinks: 1990-2013*, EPA 430-R-15-004, April 15, 2015.

[46] For further discussion, see section "Issues in Measurement."

Figure 1. U.S. Methane Emissions: Sources

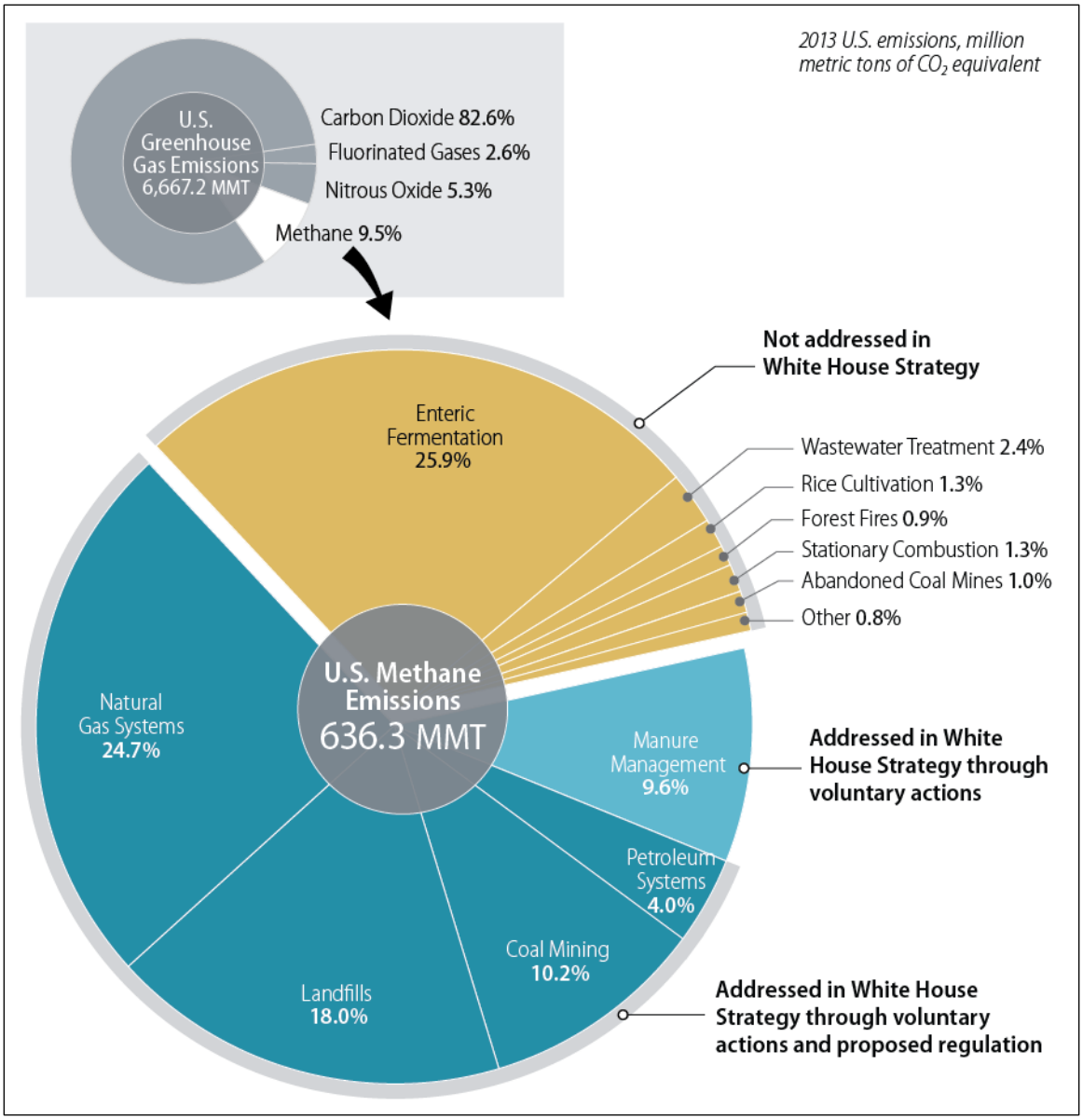

Source: CRS, with data from the U.S. Environmental Protection Agency, *Inventory of U.S. Greenhouse Gas Emissions and Sinks: 1990-2013*, EPA 430-R-15-004, April 15, 2015.

Historical Trends

Between 1990 and 2013, methane emissions in the United States decreased by almost 15%. During this time period, emissions from sources associated with agricultural activities have increased, while emissions from sources associated with waste management and energy and industrial processes have decreased (see **Figure 2**). Comparatively, the source categories for landfills and coal mining have seen the most notable reductions over the past 20 years (-38% and -33% respectively) and manure management the most notable increase (+65%), but many other subcategories have seen little or no change (see **Figure 3**).

Figure 2. U.S. Methane Emissions: Historical Trends by Source Sector

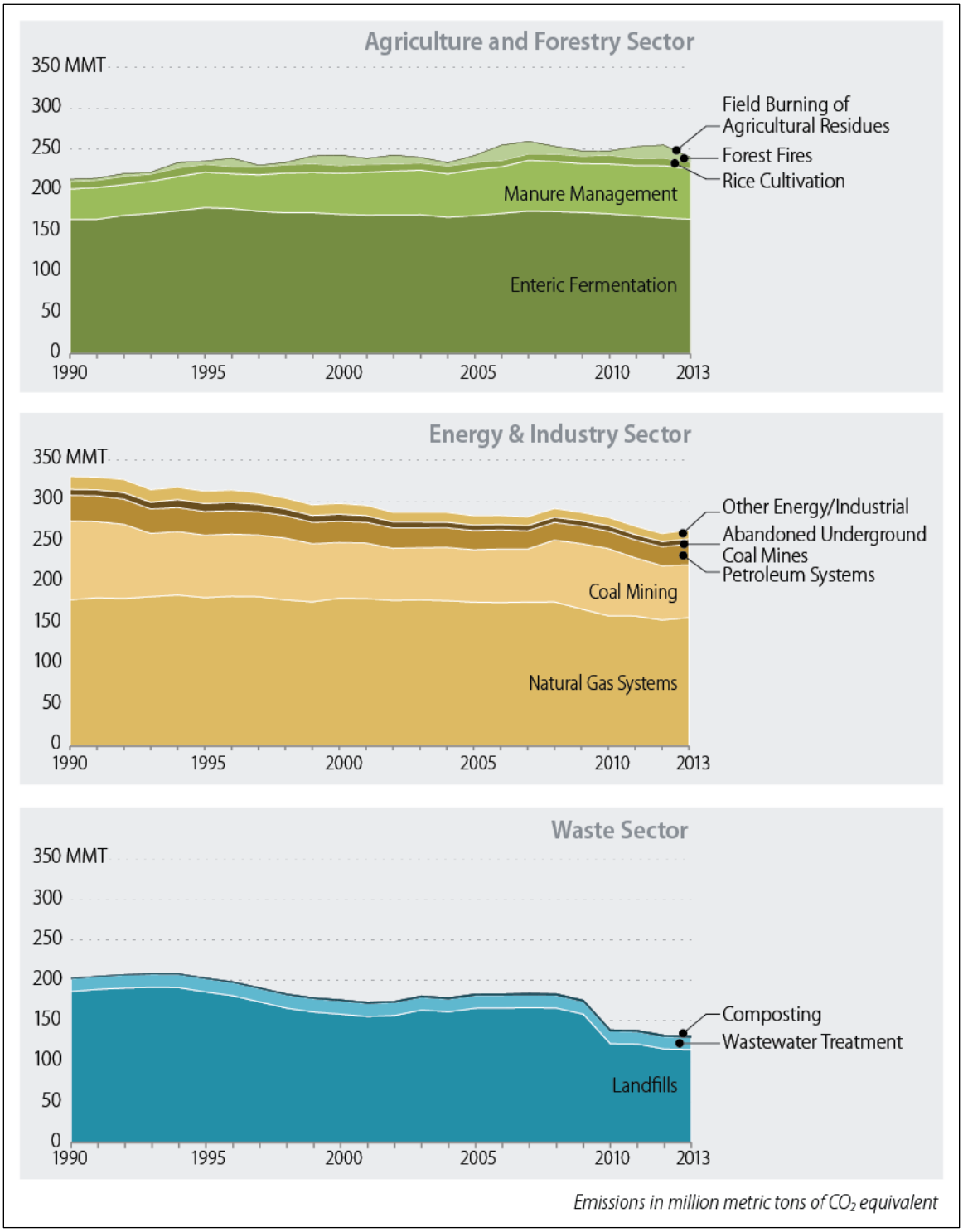

Source: CRS, with data from the U.S. Environmental Protection Agency, *Inventory of U.S. Greenhouse Gas Emissions and Sinks: 1990-2013*, EPA 430-R-15-004, April 15, 2015.

Figure 3. U.S. Methane Emissions: Historical Trends by Source Category

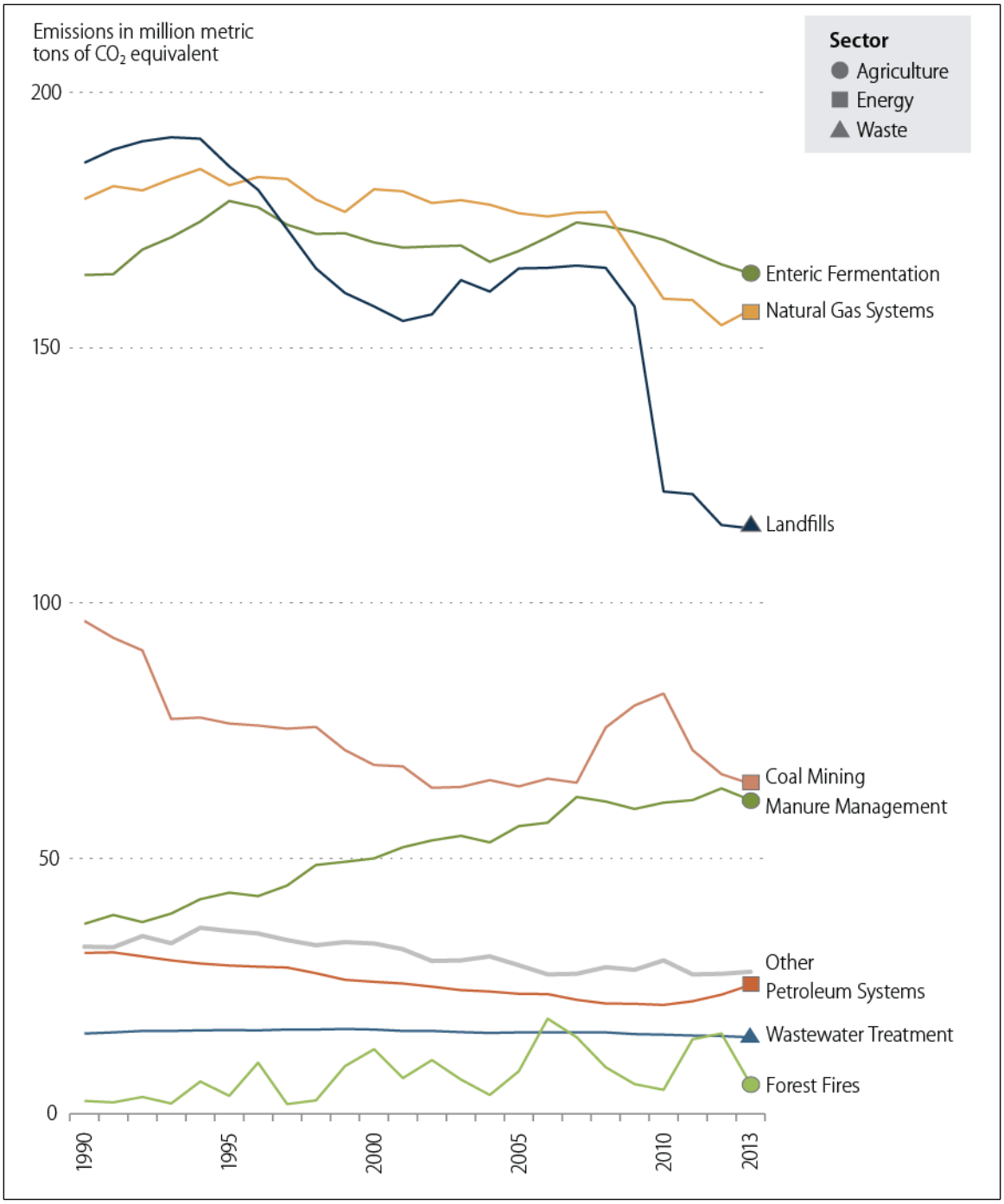

Source: CRS, with data from the U.S. Environmental Protection Agency, *Inventory of U.S. Greenhouse Gas Emissions and Sinks: 1990-2013*, EPA 430-R-15-004, April 15, 2015.

Note: "Other" sources include rice cultivation; stationary and mobile combustion; abandoned coal mines; petrochemical production; composting; iron, steel, and coke production; and the burning of agricultural residue.

Source Sectors and Mitigation Activities

Emissions of methane can be categorized into three broad source categories: agriculture, energy and industrial processes, and waste management. The following section reviews each of these categories, and

- characterizes the major sources in the sector and the respective data on emissions,[47]
- discusses current practices, opportunities, and challenges for emission control,
- summarizes current and applicable government programs and program performance data, and
- outlines the proposed initiatives in the White House's recent Strategy.

Agriculture Sector[48]

Agricultural sources of methane emissions include the following:

- **Enteric fermentation.** Methane is produced as part of normal digestive processes in animals, which is more so an issue with ruminant livestock (e.g., cattle). Microbes that reside in the animal's digestive system ferment food consumed by the animal and produce methane as a byproduct, which can be eructated (i.e., belching or flatulence) by the animal.
- **Manure management.** Methane is produced from manure management systems, primarily liquid and slurry systems. The treatment and storage of livestock manure can produce methane through its anaerobic decomposition.
- **Rice cultivation.** Methane is produced from the anaerobic environment resulting from flooded fields used for rice cultivation. Decomposition of organic material gradually depletes most of the oxygen present in the soil, causing anaerobic soil conditions.
- **Field burning of agricultural residues.** Methane is emitted from the field burning of agricultural residues, which is done usually for disposal purposes. Field burning of agricultural residues occurs more frequently in some parts of the United States and is regulated or monitored depending on state and local law. Internationally, slash-and-burn agriculture is a common form of field burning in tropical and forested areas.

The agriculture sector constituted approximately 37% of U.S. anthropogenic methane emissions in 2013.[49] From 1990 to 2013, methane emissions from agricultural sources increased by nearly 12% (see **Figure 2**). Enteric fermentation is the leading source of agricultural methane emissions and the leading source of methane emissions from all industry sectors. Livestock manure management is the second-leading agricultural source (see **Figure 3**).

[47] As shown in **Figure 3**, there are many sources of methane emissions. For editorial reasons, this report focuses only on the most significant emitters. For greater discussion on smaller sources of emissions (such as forest fires, rice cultivation, stationary combustion, abandoned coal mines, petrochemical production, mobile combustion, and iron, steel, and coke production), see EPA, Inventory.

[48] This section was authored by (name redacted), Specialist in Agricultural Conservation and Natural Resources Policy

[49] EPA, Inventory.

While best practices exist to reduce methane emitted from enteric fermentation (e.g., diet modification), it has been economically and technically challenging to systematically capture a significant portion of the methane emitted at this stage. There are, however, opportunities to reduce methane emissions from other agricultural sources, and efforts have focused on the second-largest agricultural source, manure management.

Anaerobic digestion (AD) systems[50] employed on stockpiles of manure at animal feeding operations may offer the most practical and economic method of capture. Operators have experience with AD systems partly because, for at least the last 20 years, USDA, DOE, and EPA have supported their use with financial and technical assistance (e.g., EPA/USDA's AgSTAR Program, established in 1994).[51] There are, however, some economic, operational, and safety concerns associated with the use of AD systems.[52]

The Obama Administration's Strategy takes a two-pronged approach to the reduction of agricultural methane from manure management. First, the Strategy supports a Biogas Roadmap—issued by USDA, EPA, and DOE on August 1, 2014—that outlines voluntary strategies to accelerate the adoption of AD systems and other technologies.[53] The Biogas Roadmap is a deliverable of an April 2013 Memorandum of Understanding between USDA and the Innovation Center for U.S. Dairy.[54] Second, the Strategy supports the continued use of previously established voluntary efforts (e.g., AD system deployment through assistance from numerous USDA programs).

If the primary goal of the Administration's Strategy is methane emission reduction, then the omission of the sector's major source of emissions—enteric fermentation—is noteworthy. With this omission, some may wonder how much impact methane reduction from the agricultural sector can have. However, if the primary goal is cost-effective methane emission reduction, addressing manure management may be the most viable option for the agriculture sector at the moment.

Although federal support for AD systems using voluntary measures is not new, it is difficult to calculate the full impact of past and continued federal support. It is not clear that an adequate emissions baseline has been established among the appropriate federal entities for AD systems that receive federal support. An emissions baseline could allow for long-term analysis, which is necessary to gauge future impacts (e.g., number of AD systems, number of AD systems that are fully operational, amount of financial assistance provided, amount of methane captured, amount

[50] An AD system feeds manure or other feedstock into a digester that breaks it down in a closed facility in the absence of oxygen to produce a variety of outputs including methane. The methane can then be captured for use as an energy source to produce heat or generate electricity. For more information on AD systems, see CRS Report R40667, *Anaerobic Digestion: Greenhouse Gas Emission Reduction and Energy Generation*, by (name redacted).

[51] AgSTAR is a collaborative outreach effort of EPA, USDA, and DOE designed to reduce methane emissions from livestock waste management operations by promoting the use of biogas recovery systems. For more on the program, see information at http://www.epa.gov/agstar/. Federal funding opportunities available for AD systems are provided at http://www.epa.gov/agstar/tools/financing/index.html.

[52] AD system concerns include the expense associated with system construction and operation. Additionally, the technology requires daily operation and maintenance, some of which may exceed the technical capability of the average agricultural producer. Lastly, if the methane captured from an AD system is generated for electricity and sold to a utility, there may be utility collaboration concerns, especially regarding whether the utility will accept the electricity generated and at what price.

[53] USDA, "Fact Sheet: Biogas Opportunities Roadmap: Voluntary Actions to Reduce Methane Emissions, Increase Energy Independence and Grow the Economy," August 1, 2014.

[54] USDA, "USDA and Dairy Producers Renew Agreement to Reduce Greenhouse Gas Emissions and Increase Sustainability of Dairy Production," press release, April 24, 2013.

of methane flared, amount of methane used to generate electricity). Federal program data about AD systems tend to be disparate. The Strategy may give the federal government an opportunity to improve methods to document the impact of AD systems.

Beyond the availability and impact of adequate mitigation technologies for the agricultural sector, economic factors may also dampen the adoption of best practices. For these reasons, it could be argued that the establishment of a carbon market, the use of direct government payment programs for mitigating technologies such as anaerobic digestion systems, and the development of voluntary mitigation-related contracts[55] could help alleviate costs and incentivize innovation. On the other hand, expansion of mitigation technologies such as anaerobic digestion systems may face challenges larger than economics, such as national infrastructure and cooperation with utilities or other industries that can use—but do not necessarily agree that they need—the product being sold.

Fossil Energy Sector[56]

Fossil energy sources of methane emissions include the following:

- **Petroleum systems.** Methane emissions from petroleum systems are primarily associated with crude oil production, transportation, and refining operations. During each of these activities, methane is released to the atmosphere as fugitive emissions, vented emissions, emissions from operational accidents, and emissions from incomplete fuel combustion.
- **Natural gas systems.** The U.S. natural gas system encompasses hundreds of thousands of wells, hundreds of processing and liquefaction facilities, and over 1 million miles of transmission and distribution pipelines. Emissions of methane (i.e., the principle component of natural gas) arise from vented and fugitive emissions from system components, natural gas engine and turbine uncombusted exhaust, bleed and discharge emissions from pneumatic devices, and emissions from operational accidents.
- **Coal mining.** Three types of coal-mining-related activities release methane to the atmosphere: underground mining, surface mining, and post-mining (i.e., coal-handling) activities. While surface mines account for the majority of U.S. coal production, underground coal mines contribute the largest share of methane emissions due to the higher methane concentrations in deeper coal seams.

The fossil energy sector constituted nearly 40% of U.S. anthropogenic methane emissions in 2013.[57] From 1990 through 2013, methane emissions from fossil energy sources have decreased by approximately 20% (see **Figure 2**). Natural gas systems are the leading source of emissions from the sector, and they have historically vied with enteric fermentation as the leading man-made source of methane emissions in the United States (see **Figure 3**). In its 2015 Inventory, EPA reported that methane emitted by the oil and gas sector had generally declined by 12% since 1990. However, EPA reports that it appears to be on the rise again, corresponding to increases in

[55] ICF International, *Greenhouse Gas Mitigation Options and Costs for Agricultural Land and Animal Production within the United States*, February 2013. See chapter 3 of the report for more information on methane emission reduction potential of selected types of AD systems and break-even costs.

[56] This section was authored by Richard Lattanzio, Analyst in Environmental Policy.

[57] EPA, Inventory.

domestic onshore oil and gas production.[58] Methane emissions from coal mining have fluctuated over the past two decades—but for the most part declined—and currently account for approximately 10% of made-made emissions in the United States.

Taken together, the petroleum and natural gas industry (as shown in **Figure 4**) is one of the largest sources of methane emissions in the country, contributing in excess of 28% of U.S. anthropogenic methane emissions in 2013.[59]

Sources of emissions in the oil and gas sector include the following:

- **Upstream production.** Methane may be emitted while drilling through gas-bearing geologic formations, during drilling mud circulation, during well development (following well stimulation by hydraulic fracturing) when formation fluids and fracture fluids flow back to the surface, and from field treatment equipment that separates oil, gas, and water.
- **Midstream processing and transmission.** Gathering lines connecting the wellhead to oil field treatment equipment that separates gas, oil, and water into product streams represent another source for fugitive methane and gas condensate emissions. Leaking valves, transmission lines, and pump stations add to this sector's emissions.
- **Downstream distribution.** Emissions from leaking distribution pipelines are most likely to occur from older pipelines. In 2013, there were more than 1.2 million miles of distribution mains in the United States. Of these, more than 32,000 miles of mains were older cast iron or wrought iron, and more than 61,000 miles were unprotected steel.

Some companies in the oil and gas industries have made significant voluntary reductions in methane emissions over the past decade. By volume, some of the largest reductions have come using reduced emissions completions (or "green completions")[60] during hydraulic fracturing activities, leak detection and repair technologies at processing facilities and compressor stations, reduced venting of associated gas at oil wells, and the replacement of high-emitting pneumatic devices. A number of these technologies and practices have been promoted and supported by EPA's public-private partnerships with industry, including the Natural Gas STAR Program[61] and the Coalbed Methane Outreach Program.[62] However, voluntary adoption of control techniques has been uneven across companies and regions. Consequently, in 2012, EPA promulgated emission standards for conventional pollutants (e.g., volatile organic compounds) for the oil and

[58] Ibid.

[59] Ibid.

[60] A reduced emissions completion is "a well completion following fracturing or refracturing where gas flowback that is otherwise vented is captured, cleaned, and routed to the flow line or collection system, reinjected into the well or another well, used as an on-site fuel source, or used for other useful purpose that a purchased fuel or raw material would serve, with no direct release to the atmosphere." EPA, "Oil and Natural Gas Sector: New Source Performance Standards and National Emission Standards for Hazardous Air Pollutants Reviews, Final Rule," 77 *Federal Register* 49489, August 16, 2012.

[61] EPA's Natural Gas STAR Program is designed to be a flexible, voluntary partnership that encourages oil and natural gas companies—both domestically and abroad—to adopt cost-effective technologies and practices that improve operational efficiency and reduce emissions of methane. For more on the program, including recommended technologies and practices, see http://www.epa.gov/gasstar/.

[62] EPA's Coalbed Methane Outreach Program is designed to be a voluntary program with a goal of reducing methane emissions from coal mining activities. For more on the program, including recommended technologies and practices, see http://www.epa.gov/cmop/.

gas sector through a series of New Source Performance Standards (NSPS) and National Emissions Standards for Hazardous Air Pollutants.[63] These standards have the co-benefit of reducing methane emissions from certain new sources in some segments of the gas industry.[64] Further, some states have established or proposed regulations that specifically address methane emissions from the oil and gas industry (e.g., Colorado, California, Ohio, and Wyoming, as well as a Western Governors' Association policy resolution).[65] Notwithstanding, many sources have remained uncontrolled by state or federal standards.

Figure 4. Natural Gas Industry Sectors

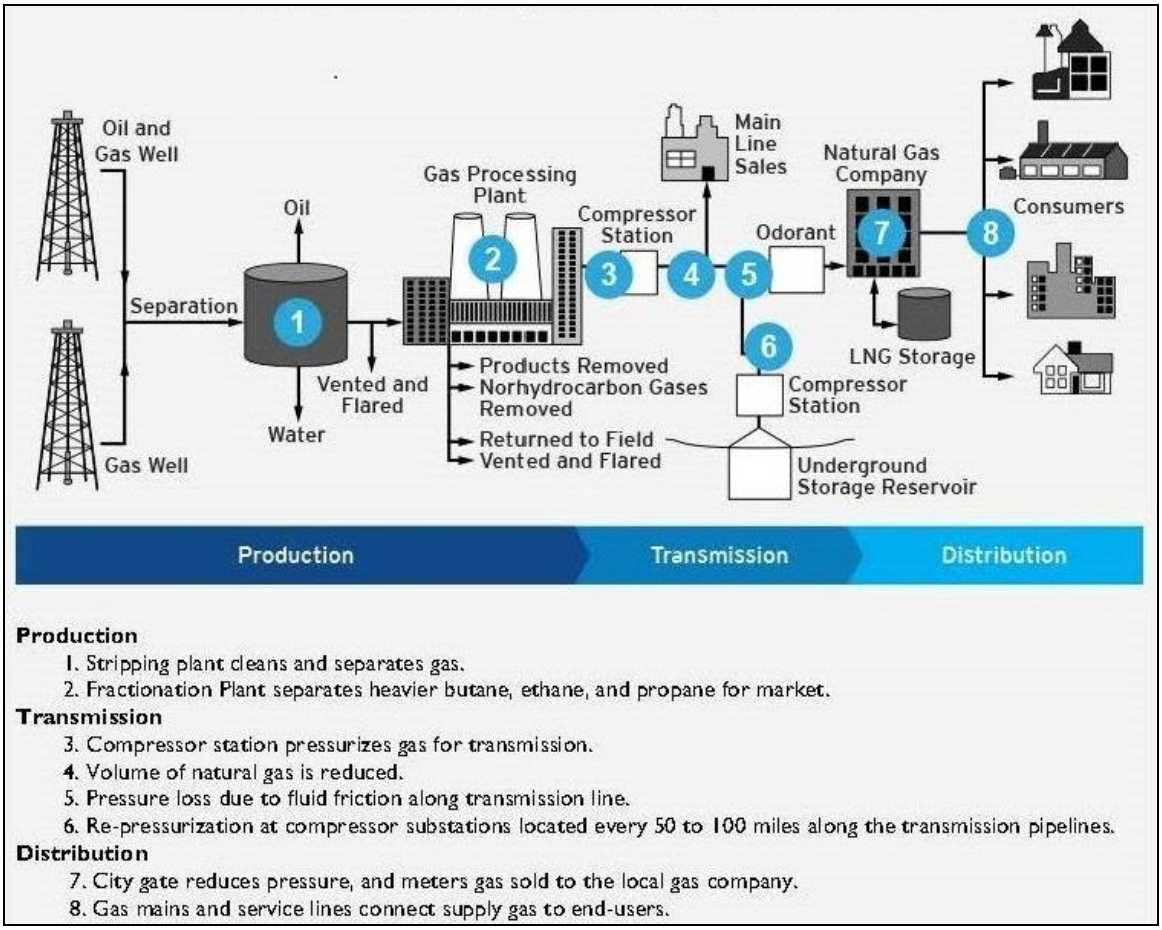

Source: DTE Energy, Natural Gas Processing, Delivery, and Storage.

[63] EPA, Oil and Natural Gas Sector NSPS.

[64] For further discussion, see CRS Report R42986, *An Overview of Air Quality Issues in Natural Gas Systems*, by (name redacted) .

[65] See Colorado's rules at http://www.colorado.gov/cs/Satellite/GovHickenlooper/CBON/1251648046456, California's rules at http://leginfo.legislature.ca.gov/faces/billNavClient.xhtml?bill_id=201320140SB1371, Ohio's proposed rules at http://www.epa.ohio.gov/dapc/genpermit/genpermits.aspx, Wyoming's proposed rules at http://deq.state.wy.us/aqd/proposedrules.asp, and the Western Governors' Association Policy Resolution 2015-02, Methane Emissions Regulation, at http://westgov.org/images/stories/policies/RESO_Methane_15-02.pdf.

Additional to EPA's standards, BLM has issued rulemakings that indirectly address methane emissions on federal lands under the Mineral Leasing Act (MLA).[66] The MLA authorizes the Secretary of the Interior to lease onshore lands owned by the United States that contain fossil fuel deposits, with the federal government retaining title to the lands. The framework of the MLA provides BLM and the federal government with flexibility to use federal lands to help satisfy the nation's energy needs while generating revenue for the federal government and protecting environmentally sensitive areas. Existing BLM rulemakings affecting methane emissions include BLM's 1980 "Notice to Lessees and Operators of Onshore Federal and Indian Oil and Gas Leases (NTL-4A): Royalty or Compensation for Oil and Gas Loss,"[67] which outlines appropriate payment terms for losses of natural resources under the authority of the MLA. The notice lists circumstances wherein operators are authorized to vent or flare methane without incurring royalty obligations.

The Obama Administration's Strategy targets methane control in the fossil energy sector through a number of agencies. Since its release, the Administration has proposed a number of rulemakings,[68] including

- An EPA proposal to build on the 2012 NSPS "to set standards for methane and VOC emissions from new and modified oil and gas production sources, and natural gas processing and transmission sources"[69] (released on August 18, 2015).[70] The new standards would extend controls for methane and VOC emissions beyond the existing requirements to include new or modified hydraulically fractured oil wells, pneumatic pumps, compressor stations, and leak detection and repair at well sites, gathering and boosting stations, and processing plants. EPA estimates that the standards for new and modified sources are expected to reduce 340,000 to 400,000 short tons of methane in 2025—the equivalent of reducing 7.7 million to 9 million metric tons of carbon dioxide—and yield net climate benefits of $120 million to $150 million in 2025.
- An EPA proposal to extend VOC reduction requirements to existing oil and gas sources in ozone nonattainment areas and states in the Ozone Transport Region (released on August 18, 2015).[71] These requirements would be in the form of Control Techniques Guidelines and would be similar to the proposed NSPS. However, Control Techniques Guidelines do not apply any requirements directly to facilities; rather, they provide recommendations for state and local air agencies to consider in determining reasonably available control technology for reducing emissions from covered processes and equipment. States may use different

[66] Mineral Leasing Act, as amended and supplemented, 30 U.S.C. 181 et seq. For a summary of the MLA and BLM's leasing activities, see BLM's website and CRS Report R40806, *Energy Projects on Federal Lands: Leasing and Authorization*, by (name redacted)

[67] DOI, "Notice to Lessees and Operators of Onshore Federal and Indian Oil and Gas Leases (NTL-4A): Royalty or Compensation for Oil and Gas Loss," January 1, 1980.

[68] EOP, "Fact Sheet: Administration Takes Steps Forward on Climate Action Plan by Announcing Actions to Cut Methane Emissions," January 14, 2015.

[69] Ibid. For a discussion of the source categories, see EPA, "White Papers on Methane and VOC Emissions," April 15, 2014, http://www.epa.gov/airquality/oilandgas/whitepapers.html.

[70] EPA, "Oil and Natural Gas Sector: Emission Standards for New and Modified Sources, Proposed Rule," 80 *Federal Register* 56593, September 18, 2015.

[71] EPA, "Control Techniques Guidelines for the Oil and Natural Gas Industry (Draft)," EPA-453/P-15-001, August 2015, http://www.epa.gov/airquality/oilandgas/pdfs/og_ctg_draft_081815.pdf.

technology and approaches, subject to EPA approval, provided they achieve the same level of emissions reductions as would be achieved under the guidelines.

- An EPA proposal to clarify the definitions for "major source" categories in the oil and natural gas sector for the purpose of permitting (released on August 18, 2015).[72]
- An EPA proposal to expand voluntary efforts under the Natural Gas STAR program and provide several new mechanisms through which oil and gas companies could make and track commitments to reduce methane emissions (released on July 23, 2015).[73]
- An EPA proposal to strengthen its Greenhouse Gas Reporting Program to require reporting in all segments of the industry (released on December 9, 2014).[74]
- A BLM proposal to update standards to reduce venting and flaring from oil and gas production on federal lands (released on January 22, 2016)[75] and an ANPRM to develop a program for the capture and sale or disposal of waste mine methane on lands leased by the federal government (released on April 28, 2014).[76]
- Several Department of Transportation PHMSA proposals for natural gas pipeline safety standards.[77]
- The President's FY2016 budget request for $15 million in funding for DOE to develop and demonstrate more cost-effective technologies to detect and reduce losses from natural gas transmission and distribution systems and $10 million in funding to launch a program to enhance the quantification of emissions from natural gas infrastructure.
- DOE proposals to issue energy efficiency standards for natural gas and air compressors, advance research and development to bring down the cost of detecting leaks, work with Federal Energy Regulatory Commission to modernize natural gas infrastructure, and partner with local distribution companies to accelerate pipeline repair and replacement at the local level.
- DOE's Quadrennial Energy Review, which would include "additional policy recommendations and analysis on the environmental, safety, and economic benefits of investments that reduce natural gas system leakage."[78]

The Administration states that these proposals are key components under the CAP to put the United States on track to reduce methane emissions from the oil and gas sector by 40%-45% from 2012 levels by 2025. The oil and natural gas industry has argued against the need for additional

[72] EPA, "Source Determination for Certain Emission Units in the Oil and Natural Gas Sector: Proposed Rule," 80 *Federal Register* 56579, September 18, 2015.

[73] EPA, Natural Gas STAR Methane Challenge Program Proposal, http://www.epa.gov/gasstar/methanechallenge/index.html.

[74] EPA, "Greenhouse Gas Reporting Rule: 2015 Revisions and Confidentiality Determinations for Petroleum and Natural Gas Systems; Proposed Rule," 79 *Federal Register* 73148, December 9, 2014.

[75] BLM, "Waste Prevention, Production Subject to Royalties, and Resource Conservation: Proposed Rule," January 22, 2016.

[76] BLM, "Waste Mine Methane Capture, Use, Sale, or Destruction," 79 *Federal Register* 23923, April 28, 2014.

[77] For an update on PHMSA pipeline rulemaking, see http://www.phmsa.dot.gov/pipeline/regs.

[78] EOP, Fact Sheet. For more discussion, see DOE, "Factsheet: An Initiative to Help Modernize Natural Gas Transmission and Distribution Infrastructure," http://energy.gov/articles/factsheet-initiative-help-modernize-natural-gas-transmission-and-distribution.

standards, contending that they are unnecessary (due to the historical decline in the sector's emissions), duplicative (of many state requirements), and a burden (as many domestic producers are already doing everything feasible to capture and reuse methane emissions for requisite safety and economic reasons). Health and environmental advocates welcomed the proposed rules but suggested that the NSPS does not go far enough in addressing existing sources of emissions.

Notwithstanding these criticisms, the possibility remains open for EPA to propose performance standards on methane emissions for existing sources in the future. That is, for certain pollutants, promulgation of NSPS under Section 111(b) triggers a mandatory EPA duty under CAA Section 111(d) to address existing sources in the same source category. At present, however, there is a looming legal question as to precisely what those "certain pollutants" are. This question of which pollutants trigger the Section 111(d) program for existing sources is likely to be front and center in the litigation expected soon over EPA's Clean Power Plan.[79] The answer provided by the courts could affect EPA's willingness to move forward with regulation of existing sources of methane from the oil and natural gas sector.

Waste Management Sector[80]

Waste management sources of methane emissions include the following:

- **Landfills.** Landfill gas—a mixture of roughly 50% methane, 50% CO_2, and small amounts of other gases—is released into the atmosphere if not captured. The amount of gas produced at any given landfill depends on the amount of organic material in the waste, the landfill's design, the climate at the site of the landfill, and the operating practices used by the site's operator. In general, large amounts of organic waste and high levels of moisture in a landfill lead to greater gas production.
- **Wastewater treatment.** Wastewater from domestic and industrial sources is commonly treated to remove soluble organic matter and other contaminants. Soluble organic matter may be removed using biological processes in which microorganisms consume the organic matter for maintenance and growth. On occasion, these processes may be accidentally or deliberately managed under anaerobic conditions, producing methane.
- **Composting.** Composting of organic waste—such as food waste, garden (yard) and park waste, and sludge—is a common practice in the United States. Methane is formed in anaerobic sections of the compost, but its impacts are generally mitigated due to oxygenation in the aerobic sections of the compost.

Waste management and treatment activities constituted approximately 21% of U.S. anthropogenic methane emissions in 2013. Landfills accounted for approximately 18% of this total, the third-largest contribution of any methane source in the United States. Landfills emitted 114.6 million metric tons of CO_2 equivalents, or 1.7% of total U.S. GHG emissions (see **Figure 1**).[81] Although substantial, methane emissions from landfills have declined almost 40% in recent years from a high of 191.2 million metric tons (MMT) in 1993 (see **Figure 3**). Additionally, wastewater

[79] For further discussion, see CRS Legal Sidebar WSLG781, EPA Regulation of Greenhouse Gases from Existing Power Plants—Part One: Does the Clean Air Act Allow It?, by (name redacted).

[80] This section was authored by (name redacted), Specialist in Environmental Policy.

[81] EPA, Inventory.

treatment and composting of organic waste accounted for 2.4% and less than 1% of U.S. methane emissions, respectively.

Currently, landfill gas is captured at the nation's largest landfills. A common landfill gas capture system consists of an arrangement of vertical wells and horizontal collectors usually installed after a landfill cell has been capped. A 1996 CAA regulation known as the "Landfill Gas Rule" established NSPS and guidelines that require landfills with a 2.5 MMT design capacity that accepted waste after November 8, 1987, to capture and burn the gas. The gas can be either flared or used for energy production—it is often used as fuel for electricity generation. In promulgating the 1996 rule, EPA said that the 2.5 MMT minimum "corresponds to cities greater than 100,000 people." The agency also stated that the regulations "will only affect less than 5 percent of all landfills" but would reduce emissions of methane by 37% at new landfills and by 39% at existing facilities. Partly as a result of the 1996 regulation, and partly due to tax incentives and voluntary programs, there are 645 operational methane capture projects at landfills as of March 2015.[82] This represents roughly one-third of the 1,800 to 1,900 operational municipal solid waste landfills reported in operation by EPA.[83]

Even under ideal conditions, the capture of landfill gas is a technical challenge in an operationally dynamic environment. Whatever success existing regulations, tax incentives, and voluntary programs may be having, a significant amount of methane continues to be emitted even at landfills subject to the Landfill Gas Rule. In addition, there are few methane capture projects at smaller landfills and at landfills that ceased operation before November 1987 (those not covered under the CAA). The latter group, numbering in the tens of thousands of sites, poses a particular challenge. Often, there is no responsible party who might implement a methane collection system if the site's original owner is no longer in business.

Thus, in response to the Administration's Strategy, EPA is in the process of reviewing the 1996 Landfill Gas Rule and Guideline. On August 14, 2015, the agency released proposed revisions to the NSPS for new and modified landfills and to the Emission Guidelines for existing landfills.[84] The NSPS would make no change in the universe of new or modified landfills subject to its requirements: The threshold would remain at 2.5 MMTof design capacity (or 2.5 million cubic meters of waste), but it would change the emission threshold at which landfills would be required to begin capturing landfill gases. Under the proposed rule, EPA would require that a gas collection control system be installed and operational within 30 months after landfill gas emissions reach 34 metric tons of nonmethane organic compounds or more per year. Under the current NSPS, this threshold is 50 metric tons per year.

EPA expects relatively few landfills to be affected by the proposed NSPS, because few new and modified landfills will be constructed. According to an agency fact sheet, 127 new, modified, or reconstructed landfills would be subject to the emission control requirements of the proposed standards by 2025. The proposal would reduce annual methane emissions by 51,400 metric tons beginning in 2025, compared to current requirements. This would be the equivalent of reducing

[82] EPA, Landfill Methane Outreach Program, Energy Projects and Candidate Landfills, http://www.epa.gov/lmop/projects-candidates/index.html.

[83] Slightly different estimates of the number of operational MSW landfills were presented at various points in EPA's July 2014 ANPRM for existing MSW landfills. See EPA, "Emission Guidelines and Compliance Times for Municipal Solid Waste Landfills," Advance Notice of Proposed Rulemaking, 79 *Federal Register* 41778, July 17, 2014.

[84] The NSPS proposal is actually a supplemental proposal to an earlier version that EPA proposed on July 17, 2014. The new version lowers the emission threshold at which new, modified, or reconstructed landfills would be required to begin capturing landfill gas emissions from 40 metric tons per year to 34 metric tons.

carbon dioxide emissions by 1.3 MMT per year, about 1% of current estimated landfill emissions.[85]

The proposed guidelines for existing landfills would require the installation of landfill gas collection and control systems at active landfills that emit more than 34 metric tons of nonmethane organic compounds annually, as well. The annual threshold has been 50 metric tons under the 1996 guidelines. Closed landfills would remain subject to the current threshold of 50 metric tons per year, however.

As a result of the lower threshold for active landfills, EPA estimates that the proposed emission control requirements would apply at 680 existing open and closed landfills, as compared to 574 facilities currently subject to emission control requirements. Methane emissions are expected to be reduced by more than 436,000 metric tons annually beginning in 2025 at these existing facilities, compared to current requirements (the equivalent of reducing 10.9 MMT of CO_2). This would be about a 10% reduction from the current level of landfill methane emissions.[86]

Issues in Measurement[87]

Unlike CO_2, whose emissions are reported using well-tracked energy statistics,[88] methane is emitted to the atmosphere primarily through fugitive releases of the gas (e.g., leaks in infrastructure, vapors from landfills, eructation [i.e., belching or flatulence] from livestock). By definition, fugitive emissions are diffuse, transitory, and elusive. Thus, one of the greater difficulties in understanding the impacts of methane emissions is acquiring comprehensive and consistent observational data. Broadly, there are two approaches to measuring fugitive emissions of methane: "bottom-up" and "top-down." Each approach has its respective strengths, weaknesses, and uncertainties. At present, the difference in data acquisition and analysis between these two approaches has returned competing—and occasionally conflicting—emission estimates.

- **Bottom-up approaches.** Bottom-up methodologies begin by directly measuring the emissions from a number of randomly selected pieces of equipment or activities to determine an average "emission factor" (i.e., formula) for each type. Emissions for the entire industry are then estimated by multiplying these emission factors by the activity levels for each component (e.g., the total population of livestock and its diet, the number of oil and gas wellheads and other components, or the volume of landfill material). Thus, while the inventory is supported by initial direct measurements, the final results are statistical averages derived through computation and may not reflect actual emissions in the field. Because the quality of methane data for some sources can be either absent or highly variable, bottom-up emission estimates entail considerable uncertainty.
- **Top-down approaches.** Other studies use "top-down" methodologies for the calculation of leakage (e.g., satellite observations, ambient atmospheric measurements, and geostatistical inverse modeling). Atmospheric studies use

[85] EPA, "Supplemental Proposal for New Landfills: Fact Sheet," http://www.epa.gov/ttn/atw/landfill/20150814nspsfs.pdf.

[86] See EPA, "Proposed Emission Guidelines for Existing Landfills: Fact Sheet," http://www.epa.gov/ttn/atw/landfill/20150814egfs.pdf.

[87] This section was authored by Richard Lattanzio, Analyst in Environmental Policy.

[88] According to EPA's Inventory, over 93% of CO_2 emissions in 2013 are attributed to fossil fuel combustion for energy use. Further, many other CO_2 emissions arise from similar combustion processes in various industries.

> data sets of ambient concentrations of methane and related hydrocarbons in the vicinity of the targeted industry, along with the known emission profiles for these gases from industry operations, to infer the emissions from the sectors. (That is, these methodologies capture methane emissions from all natural, agricultural, and industrial activities. Researchers must then parse data estimates for attribution to their appropriate sources using such analyses as isotopic ratios or prevalence signatures from accompanying nonmethane hydrocarbons.) Due to the technology requirements, these studies are rarer than bottom-up approaches. As with the bottom-up approaches, different top-down studies have returned different emission estimates. Further, reported emission rates have varied considerably across different regions, making source attribution highly uncertain at the national level.

In general, top-down methodologies have returned higher emission estimates than bottom-up approaches. Reasons for this discrepancy include (1) researchers may be attributing naturally occurring methane emissions to man-made sources; (2) researchers may be attributing emissions inaccurately from one man-made sector to another; (3) atmospheric measurements may capture emissions that are not accounted for in EPA's Inventory (e.g., leakage from abandoned gas wells); (4) atmospheric measurements capture all the gross emitters, accidents, spills, and human errors, whereas component measurements use emission factors averaged over instances of "normal operation"; and (5) atmospheric studies may be biased to regions where there is known leakage.

Currently, the primary source of information on methane emissions in the United States is EPA's annually published *Inventory of U.S. Greenhouse Gas Emissions and Sinks*. EPA's Inventory is a "bottom-up" approach, employing commonly accepted emission factors and activity levels to calculate aggregate estimates for all source categories. Methodologies for the Inventory are based primarily on 2006 guidelines released by the IPCC[89] and supplemented with additional domestic information where available.[90] Bottom-up methodologies are used also for EPA's Greenhouse Gas Reporting Program,[91] as well as the Energy Information Administration's *Natural Gas Annual*. Further, there are many examples of state,[92] local, and nongovernmental inventories[93]

---

[89] IPCC, *2006 IPCC Guidelines for National Greenhouse Gas Inventories.*

[90] EPA has undertaken its own emissions studies and modeling practices for the various U.S. sectors, including the development of the EPA Cattle Enteric Fermentation Model the Gas Research Institute and EPA, *Methane Emissions from the Natural Gas Industry, Volumes 1-15,* GRI-94/0257 and EPA 600/R-96-080, June 1996. EPA also references a multitude of academic literature for its calculations (see respective references in the Inventory). Further to this, EPA annually takes comments on its Inventory methodology, and adopts revisions where appropriate.

[91] In response to the Consolidated Appropriations Act, 2008 (H.R. 2764; P.L. 110-161), EPA issued the Greenhouse Gas Reporting Rule (74 *Federal Register* 56260), which requires reporting of GHG data and other relevant information from large sources and suppliers in the United States. Sectors include petroleum and natural gas systems, industrial and municipal landfills, and industrial wastewater treatment facilities but not agriculture or forestry sources. See EPA GHG Reporting Program website at http://www.epa.gov/ghgreporting/.

[92] See, for example, Texas Commission on Environmental Quality, *Barnett Shale Phase Two Special Inventory Data*, 2011, http://www.tceq.texas.gov/airquality/point-source-ei/psei.html; Colorado Department of Natural Resources "State to Undertake Major Study on Oil and Gas Emissions," press release, January 9, 2013, http://dnr.state.co.us/Media/Pages/PressReleases.aspx; and California Greenhouse Gas Emission Inventory, http://www.arb.ca.gov/cc/inventory/inventory.htm.

[93] See, for example, the Environmental Defense Fund, which, in conjunction with several universities and environmental engineering firms, announced on October 10, 2012, the launch of a comprehensive study of methane emissions from natural gas infrastructure in an effort to accumulate new data. These studies replicate the "component measurement" methodologies of EPA's Inventory, using current conditions and measurement practices. The first sector study—production—was published in 2013 (David T. Allen et al., "Measurement of Methane Emissions at Natural Gas Production Sites in the United States," *Proceedings of the National Academy of Sciences of the United States of* (continued...)

commissioned by a range of stakeholders—from regional and municipal agencies to community groups and academic institutions.

Due to the differences in emission factors, industry reporting, and levels of uncertainty, current inventories have returned a variety of emission estimates. These differences have also contributed to periodic revisions to EPA's Inventory, and these revisions have returned occasionally significant fluctuations in reporting. (For example, emission estimates in the Inventory for natural gas systems have fluctuated between 96.4 $MMTCO_2e$ and 221.2 $MMTCO_2e$ over the past five years due simply to changes in reporting methodology.) Furthermore, EPA's Inventory has been challenged by a number of academic studies as under-reporting methane releases from man-made sources. (As examples, a 2015 study by Yale researchers concludes that methane emissions from U.S. landfills may be double EPA's estimates,[94] a 2014 study by federal and academic researchers suggests that methane emissions from gas-producing areas in Colorado are as much as three times higher than EPA inventories,[95] a 2013 paper published by Harvard University researchers and federal scientists suggests that EPA's oil and gas figures may be underestimated in some cases by as much as 50%,[96] and a February 2014 study by Stanford University researchers estimates that methane leakage from natural gas lines and other sources could be 50% higher than current EPA estimates.[97])

The White House Strategy proposes actions to enhance U.S. methane measurement in support of two broad goals: (1) improving the bottom-up emission data relevant for mitigation, and (2) advancing the science and technology for monitoring and validating atmospheric concentrations.[98] Actions in the Strategy include efforts to (1) enhance EPA's Inventory through new scientific evidence and data sources, (2) encourage the development of cost-effective measurement technologies through funding at DOE's Advanced Research Projects Agency—Energy, (3) maintain and further develop a nationwide methane monitoring network through funding at the National Oceanic and Atmospheric Administration,[99] and (4) improve local, regional, and global emission modeling at EPA and DOE. EPA is already in the process of outlining a comprehensive strategy for significantly improving its methodology for estimating emissions from the oil and natural gas sector. This effort is in response to recommendations made by an EPA inspector general report.[100] Moving forward, the Strategy will need to find a way to harmonize the differences in reporting between the bottom-up and top-down studies, dampen the artificial annual fluctuations in reported estimates, and provide more transparent and unbiased

(...continued)

America, vol. 10, no. 44, pp. 17768-17773, October 29, 2013). For more information, see Environmental Defense Fund's *Methane Leakage Study* at http://www.edf.org/methaneleakage.

[94] Jon T. Powell et al., "Estimates of Solid Waste Disposal Rates and Reduction Targets for Landfill Gas Emissions," *Nature Climate Change*, published online September 21, 2015.

[95] Gabrielle Patron et al., "A New Look at Methane and Non-Methane Hydrocarbon Emissions from Oil and Natural Gas Operations in the Colorado Denver-Julesburg Basin," *Journal of Geophysical Research: Atmospheres*, vol. 119, no. 11 (June 16, 2014), pp. 6836-6852.

[96] Scott Miller et al., "Anthropogenic Emissions of Methane in the United States," *Proceedings of the National Academy of Sciences of the United States of America*, vol. 110, no. 50 (December 10, 2013), pp. 20018–20022.

[97] Adam Brandt, et al., "Methane Leaks from North American Natural Gas Systems," *Science*, vol. 343, no. 6172 (February 14, 2014), pp. 733-735.

[98] EOP, *Strategy*, pp. 11-14.

[99] The President's FY2015 budget requests $8 million above current funding of $6.5 million for this program.

[100] EPA, Office of the Inspector General, "EPA Needs to Improve Air Emissions Data for the Oil and Natural Gas Production Sector," Report No. 13-P-0161, February 20, 2013.

source data in order to guarantee credibility in EPA's Inventory for all stakeholders and fairness in any subsequent rulemaking.

Conclusion

For a variety of economic, environmental, and public health and safety reasons, various stakeholders have sought policies to reduce, capture, and reuse methane emissions for the past several decades. But emissions of methane have proven to be difficult to measure and hard to control. Their naturally occurring presence in the environment, their wide and varied sources of emissions, and the fugitive nature of their release have contributed to these difficulties. Nevertheless, methane is a valuable resource. Its dual nature as both pollutant and commodity has offered a unique opportunity for control, and many strategies have attempted to capitalize on the economics of recovery. Whether a given control strategy is effective and cost-efficient for a given industry depends upon a number of factors, including (1) the nature and extent of the emissions, (2) the technology available for capture, and (3) the market price for the recovered products. (For example, with declining natural gas prices, the economics of capture technology are less favorable.) Some significant efforts have been made by industry and some state regulators to address methane emissions in their particular localities. For its part, the federal government has contributed funding for research and technology development, voluntary guidelines and tax incentives for industry, rules for mineral rights lessees on federal lands, and, on occasion, air pollution standards.

While the most current data on domestic methane emissions show close to a 15% decrease over the past two decades, the source categories that have contributed to these reductions are few (i.e., landfills, coal mines, and natural gas systems). While these industries have made noteworthy strides in emission reductions through a combination of best management practices and the co-benefits provided by other air pollution standards, they may represent only the "low-hanging fruit." Other sources of methane emissions have confronted greater challenges. They may lack adequately demonstrated control technologies or cost-effective opportunities. They may not co-emit methane with other air pollutants and thus may lack the "co-benefits" accrued through other air quality standards. Some of these sources have seen recent or sustained increases in emissions (e.g., petroleum systems and manure management, respectively). Other sources (e.g., enteric fermentation and wastewater treatment) have gone unaddressed for decades, as no economically viable technology solution has been offered.

The Obama Administration's recent Strategy—as well as a variety of recent proposals in Congress—attests to the continued interest in better emission assessments and appropriate policy responses. In considering strategies moving forward, it may be useful to ask the following questions:

1. Is the current set of methodologies used for measurement adequate enough to rationalize and/or prioritize the appropriate controls?
2. Is the projected rise in domestic fossil fuel production and petrochemical manufacturing significant enough to rationalize and/or prioritize additional controls?
3. Is the current rate of decline in observed emissions expected to continue, and, if so, is it sufficient enough to discharge the public health, safety, and environmental concerns?
4. To what extent might fluctuations in the market price of crude oil and natural gas affect industry and regulatory efforts in mitigating and/or recovering methane emissions?

5. To what extent may recently promulgated and proposed rulemaking for air pollutants commonly co-emitted with methane also serve the co-benefit of reducing emissions of methane (e.g., the NSPS for VOCs on the oil and gas production sector and the petroleum refinery sector, and the revised National Ambient Air Quality Standard for ozone)?
6. To what extent may the recently proposed rulemakings for methane emissions in the oil and natural gas sector and the landfill sector serve to (1) curb emissions from both new and existing sources in each sector and (2) curb the aggregate of all domestic emissions?
7. If further reductions are under consideration for a given source category, should the response come from the federal government, state governments, the industries, or the market?
8. If further reductions are under consideration for a given source category, which policy tool(s) would be most appropriate: (1) increased funding for technology research, (2) expanded public-private demonstration projects with industry, (3) regionally targeted or state-sponsored guidance or rulemaking, (4) methane-specific state or federal command-and-control air pollution standards, or (5) economy-wide market-based mechanisms for either ozone or GHG controls?
9. How should the burden of GHG reductions be distributed among the various GHG emissions sources?
10. How should methane's other environmental benefits (in comparison to oil and coal combustion) be weighed in the context of its GHG control?

Appendix A. Recent Legislative Proposals

Table A-1. A Selection of Recent Legislative Proposals with Methane Components

Cong.	Bill No.	Bill Title	Sponsor	Last Action	Methane Component
114	H.R. 4037	Keeping Oil and Natural Gas Flowing for Consumers Act	Rep. Fleming, John	11/20/2015: referred to the Subcommittee on Energy and Power.	The bill would prohibit EPA from proposing, finalizing, implementing, or enforcing any prohibition or restriction under the CAA with respect to the emission of methane from the oil and natural gas source category.
114	H.R. 3289	Natural Gas Environmental and Economic Security Act	Rep. Lowenthal, Alan S.	7/29/2015: referred to the Committee on Natural Resources.	The bill would aim to prevent the waste of gas produced under oil and gas leases on federal land and to collect royalty on all gas production.
114	H.R. 3140	AMPLE Oil and Gas Royalties Act	Rep. Lipinski, Daniel	8/4/2015: referred to the Subcommittee on Energy and Mineral Resources.	The bill would require federal oil and gas leases to report and pay royalties on oil and gas production based on the actual volume of oil and gas withdrawn under a lease.
114	H.R. 2822	Department of the Interior, Environment, and Related Agencies Appropriations Act, 2016	Rep. Calvert, Ken	7/8/2015: Committee of the Whole House on the state of the Union rises leaving H.R. 2822 as unfinished business.	The bill would prohibit any funds made available in the act to be used to promulgate or implement any regulation requiring the issuance of permits under Title V of the CAA (42 U.S.C. 7661 et seq.) for carbon dioxide, nitrous oxide, water vapor, or methane emissions resulting from biological processes associated with livestock production.
114	H.R. 2202	Tax Pollution, Not Profits Act	Rep. Delaney, John K.	5/1/2015: referred to the Committee on Education and the Workforce.	The bill would amend the Internal Revenue Code to impose an excise tax on GHG emissions, including methane, from fossil fuel products and from any facility that is required to report emissions or to which emissions are attributed. The tax is equal to $30 per metric ton of CO_2 or CO_2 equivalent in 2016, increasing each subsequent year at 4% above inflation.
114	H.R. 2142	Capitalizing on American Methane Act of 2015	Rep. Thompson, Glenn	4/30/2015: referred to the Committee on Ways and Means.	The bill would amend the Internal Revenue Code to include in the tax credit for investment in a qualifying gasification project any qualified methane conversion technology.

Cong.	Bill No.	Bill Title	Sponsor	Last Action	Methane Component
114	H.R. 2111	Wasteful EPA Programs Elimination Act of 2015	Rep. Johnson, Sam	5/27/2015: referred to the Subcommittee on Conservation and Forestry.	The bill would prohibit EPA from using any funds to implement an ozone standard, including any national primary or secondary ambient air quality standard for ozone promulgated (or revised) under Section 109 of the Clean Air Act, and eliminate funding for the Global Methane Initiative, among other EPA GHG programs.
114	H.R. 1971	Climate Solutions Act of 2015	Rep. Lieu, Ted	4/24/2015: referred to the Subcommittee on Energy and Power.	The bill would require the EPA Administrator to promulgate annual GHG emission reduction targets, inclusive of methane, for each of calendar years 2030 through 2050.
114	H.R. 1926	Robert C. Byrd Mine Safety Protection Act of 2015	Rep. Scott, Robert C. "Bobby"	4/22/2015: referred to the Committee on Education and the Workforce.	The bill would require the Secretary of Health and Human Services to promulgate regulations requiring that mining equipment used in a coal mine incorporate an atmospheric monitoring and recording device that samples and records the methane, oxygen, carbon monoxide, and coal dust levels in the mine. The bill was introduced in the 112th Congress as S. 3443 and the 113th Congress as S. 805.
114	H.R. 1806	America COMPETES Reauthorization Act of 2015	Rep. Smith, Lamar	Passed House; 5/21/2015: received in the Senate and read twice and referred to the Committee on Commerce, Science, and Transportation.	The bill would amend Section 302(g) of the CAA (42 U.S.C. 7602(g)) by adding "The term 'air pollutant' does not include carbon dioxide, water vapor, methane, nitrous oxide, hydrofluorocarbons, perfluorocarbons, or sulfur hexafluoride."
114	H.R. 1487	American Energy Renaissance Act of 2015	Rep. Bridenstine, Jim	4/8/2015: referred to the Subcommittee on Indian, Insular and Alaska Native Affairs.	The bill would amend Section 302(g) of the CAA (42 U.S.C. 7602(g)) by adding "The term 'air pollutant' does not include carbon dioxide, water vapor, methane, nitrous oxide, hydrofluorocarbons, perfluorocarbons, or sulfur hexafluoride."

Cong.	Bill No.	Bill Title	Sponsor	Last Action	Methane Component
114	H.R. 972	Managed Carbon Price Act of 2015	Rep. McDermott, Jim	2/20/2015: referred to the Subcommittee on Energy and Power.	The bill would amend the Internal Revenue Code to require U.S. coal producers, oil refinery operators, first sellers of natural gas, and producers of other GHG emission substances and importers of any GHG emission substance to purchase a federal emission permit from the Department of the Treasury for the sale, combustion, or other use of a GHG emission substance and would establish emission reduction targets for 2016 through 2060 decreasing from 90% to 20% of the CO_2 equivalents emitted in the United States in 2005.
114	H.R. 508	SUPER Act of 2015	Rep. Peters, Scott H.	1/23/2015: referred to the Subcommittee on Energy and Power.	The bill would require the President to establish a task force on short-lived climate pollutants including methane. The task force would review existing and potential policies that promote emissions reduction, identify duplications and gaps in current programs, recommend efficiencies, and identify, compile, evaluate, and develop best practices. The bill was introduced in the 113th Congress as H.R. 1943.
114	S. 2399	Climate Protection and Justice Act of 2015	Sen. Sanders, Bernard	12/10/2015: referred to the Committee on Finance.	The bill would require the Secretary of the Treasury, in consultation with the Administrator, to impose a fee on any manufacturer, producer, or importer of a carbon polluting substance to be assessed on a per ton of carbon dioxide equivalent content.
114	S. 2089	American Energy Innovation Act	Sen. Cantwell, Maria	09/29/2015: placed on Senate Legislative Calendar under General Orders. Calendar No. 241.	The bill would provide for the Secretary of Energy to make grants to eligible entities to accelerate or expand utility programs that improve the safety and environmental performance of natural gas distribution systems, based on, among other provisions, the project's magnitude of methane emission reductions.
114	S. 2076	Super Pollutants Act of 2014	Sen. Murphy, Chris	9/24/2015: referred to the Committee on Environment and Public Works.	The bill would establish a task force to review policies and measures to promote, and develop best practices for, reduction of short-lived climate pollutants including methane. The bill was introduced in the 113th Congress as S. 2911.

Cong.	Bill No.	Bill Title	Sponsor	Last Action	Methane Component
114	S. 1645	Department of the Interior, Environment, and Related Agencies Appropriations Act, 2016	Sen. Murkowski, Lisa	6/23/2015: placed on Senate Legislative Calendar under General Orders. Calendar No. 126.	The bill would prohibit any funds made available in the act to be used to promulgate or implement any regulation requiring the issuance of permits under Title V of the CAA (42 U.S.C. 7661 et seq.) for CO_2, nitrous oxide, water vapor, or methane emissions resulting from biological processes associated with livestock production.
114	S. 1548	American Opportunity Carbon Fee Act of 2015	Sen. Whitehouse, Sheldon	6/10/2015: read twice and referred to the Committee on Finance.	The bill would amend the Internal Revenue Code of 1986 to provide for CO_2 and other GHG emission fees, including supplemental fees for escaped methane from coal, petroleum, and natural gas production activities. Further, the bill would establish and implement a program to provide for the collection of data on methane emissions by major non-natural sources, including methane emissions attributable to the extraction and distribution of coal, petroleum products, and natural gas.
114	S. 1264	Renewable Electricity Standard Act	Sen. Udall, Tom	5/19/2015: Committee on Energy and Natural Resources. Hearings held.	The bill would amend the Public Utility Regulatory Policies Act of 1978 to establish a renewable electricity standard, including landfill methane as a category of biogas.
114	S. 1215	Methane Hydrate Research and Development Amendments Act of 2015	Sen. Murkowski, Lisa	5/19/2015: Committee on Energy and Natural Resources. Hearings held.	The bill would amend the Methane Hydrate Research and Development Act of 2000 to provide for the development of methane hydrate as a commercially viable source of energy.
114	S. 1208	Pipeline Modernization and Consumer Protection Act	Sen. Markey, Edward J.	5/6/2015: read twice and referred to the Committee on Commerce, Science, and Transportation.	The bill would require operators of a gas pipeline facility, in accordance with an integrity management program, to accelerate the repair, rehabilitation, and replacement of gas piping or equipment that is leaking or may pose high risk of leaking. Further, the bill would direct the administrator of the Pipeline and Hazardous Materials Safety Administration to issue nonbinding best practices guidelines for identifying and classifying high-risk pipeline infrastructure and leaks for repair or replacement.

Cong.	Bill No.	Bill Title	Sponsor	Last Action	Methane Component
114	S. 1145	Robert C. Byrd Mine Safety Protection Act of 2015	Sen. Casey, Robert P., Jr.	4/30/2015: read twice and referred to the Committee on Health, Education, Labor, and Pensions.	The bill would require the Secretary of Health and Human Services to promulgate regulations requiring that mining equipment used in a coal mine incorporate an atmospheric monitoring and recording device that samples and records the methane, oxygen, carbon monoxide, and coal dust levels in the mine. The bill was introduced in the 112th Congress as S. 3443 and the 113th Congress as S. 805.
114	S. 828	Fracturing Regulations are Effective in State Hands Act	Sen. Inhofe, James M.	3/19/2015: read twice and referred to the Committee on Energy and Natural Resources.	The bill would give states the sole authority to promulgate or enforce any regulation, guidance, or permit requirement regarding hydraulic fracturing on or under any land within their boundaries.
114	S. 791 (H.R. 3880 includes similar provisions.)	American Energy Renaissance Act of 2015	Sen. Cruz, Ted	3/18/2015: read twice and referred to the Committee on Energy and Natural Resources.	The bill would amend Section 302(g) of the CAA (42 U.S.C. 7602(g)) by adding "The term 'air pollutant' does not include carbon dioxide, water vapor, methane, nitrous oxide, hydrofluorocarbons, perfluorocarbons, or sulfur hexafluoride."
113	H.R. 3895 (H.R. 4286, H.R. 4304, and S. 2170 include similar provisions.)	Energy Exploration and Production to Achieve National Demand Act	Rep. Duncan, Jeff	6/20/2014: referred to House subcommittee.	The bill would have aimed to reduce or eliminate financial, regulatory, and technical barriers to energy exploration and production. It would have amended Section 302(g) of the CAA (42 U.S.C. 7602(g)) by adding "The term 'air pollutant' does not include carbon dioxide, water vapor, methane, nitrous oxide, hydrofluorocarbons, perfluorocarbons, or sulfur hexafluoride."
113	H.R. 3547	Consolidated Appropriations Act, 2014	Rep. Smith, Lamar	1/17/2014: became P.L. 113-76.	The bill prohibited any funds made available in the act to be used to promulgate or implement any regulation requiring the issuance of permits under Title V of the CAA (42 U.S.C. 7661 et seq.) for CO_2, nitrous oxide, water vapor, or methane emissions resulting from biological processes associated with livestock production.

Cong.	Bill No.	Bill Title	Sponsor	Last Action	Methane Component
113	H.R. 3424	Converting Methane Into Petroleum Act of 2013	Rep. Larson, John B.	10/30/2013: referred to House committee.	The bill would have amended the Internal Revenue Code to (1) include in the tax credit for investment in a qualifying gasification project any qualified methane conversion technology, and (2) allow an alternative fuel excise tax credit for liquid fuel produced through qualified methane conversion technology at a facility. It defined "qualified methane conversion technology" as a process for the molecular conversion of methane into other hydrocarbons and the use of such hydrocarbons to replace or reduce the quantity of petroleum present in motor vehicle fuel and for the production of chemicals.
113	H.Amdt. 507	Amendment to H.R. 2728	Rep. Holt, Rush	11/20/2013: House amendment not agreed to; failed by recorded vote: 190-230 (Roll no. 601).	Amendment would have allowed the Secretary of the Interior to issue regulations to reduce methane emissions from oil and gas drilling operations on public lands.
113	H.R. 1943	SUPER Act of 2013	Rep. Peters, Scott H.	5/10/2013: referred to House subcommittee.	The bill would have required the President to establish a task force on short-lived climate pollutants including methane. The task force would review existing and potential policies that promote emissions reduction, identify duplications and gaps in current programs, recommend efficiencies, and identify, compile, evaluate, and develop best practices.
113	H.Amdt. 512	Amendment to H.R. 1900	Rep. Tonko, Paul	11/21/2013: House amendment not agreed to; failed by recorded vote: 183-233 (Roll no. 605).	The amendment would have required an application for a natural gas pipeline to include information ensuring that methane emissions would be minimized before such application can be considered for approval.
113	H.R. 621	Ensuring Affordable Energy Act	Rep. Poe, Ted	2/15/2013: referred to House subcommittee.	The bill would have prohibited any funds appropriated or otherwise available for the EPA Administrator from being used to implement or enforce (1) a cap-and-trade program, or (2) any statutory or regulatory requirement pertaining to emissions of one or more GHGs, including methane, from stationary sources.

Cong.	Bill No.	Bill Title	Sponsor	Last Action	Methane Component
113	H.R. 83	Consolidated and Further Continuing Appropriations Act, 2015	Rep. Christensen, Donna M.	12/16/2014: became P.L. 113-235.	The bill prohibited any funds made available in the act to be used to promulgate or implement any regulation requiring the issuance of permits under Title V of the CAA Act (42 U.S.C. 7661 et seq.) for CO_2, nitrous oxide, water vapor, or methane emissions resulting from biological processes associated with livestock production and any provision in a rule requiring mandatory reporting of GHG emissions from manure management systems.
113	S. 2940	American Opportunity Carbon Fee Act	Sen. Whitehouse, Sheldon	11/19/2014: referred to Senate committee.	The bill would have amended the Internal Revenue Code to impose a fee on (1) fossil fuel products including coal, petroleum products, and natural gas, for CO_2 emissions; and (2) emissions of any GHG, including methane, from any GHG emission source. The bill would have established, implemented, and reported on a program to collect data on methane emissions by major non-natural sources, including emissions attributable to the extraction and distribution of coal, petroleum products, and natural gas.
113	S. 2911	Super Pollutants Act of 2014	Sen. Murphy, Chris, and Sen. Collins, Susan	12/2/2014: Committee on Environment and Public Works. Hearings held.	The bill would have established a task force to review policies and measures to promote, and develop best practices for, reduction of short-lived climate pollutants including methane.
113	S. 2739 (H.R. 860 includes similar provisions.)	Biogas Investment Tax Credit Act of 2014	Sen. Schumer, Charles	7/31/2014: referred to Senate committee.	The bill would have amended the Internal Revenue Code to allow for an energy tax credit through 2018 for investment in qualified biogas property, among other things. Eligible qualified biogas property was defined as including systems that use anaerobic digesters or other biological, chemical, thermal, or mechanical processes (alone or in combination) to convert biomass into methane for use as a fuel.

Cong.	Bill No.	Bill Title	Sponsor	Last Action	Methane Component
113	S. 805	Robert C. Byrd Mine and Workplace Safety and Health Act of 2013	Sen. Rockefeller, John D., IV	4/24/2013: referred to Senate committee.	The bill would have required the Secretary of Health and Human Services to promulgate regulations requiring that mining equipment used in a coal mine incorporate an atmospheric monitoring and recording device that samples and records the methane, oxygen, carbon monoxide, and coal dust levels in the mine. The bill was introduced in the 112th Congress as S. 3443.
113	S. 332	Climate Protection Act of 2013	Sen. Sanders, Bernard	2/14/2013: referred to Senate committee.	The bill would have required the EPA Administrator to impose a fee on any manufacturer, producer, or importer of a GHG polluting substance and submit to Congress a report describing the quantity of fugitive methane emissions emitted as a result of any leak in natural gas infrastructure, including recommendations for eliminating each such leak.
112	H.R. 6212	Biogas Investment Tax Credit Act of 2012	Rep. Kind, Ron	7/26/2012: referred to House committee.	The bill would have amended the Internal Revenue Code to allow for an energy tax credit through 2018 for investment in qualified biogas property. Eligible qualified biogas property was defined as including systems that use anaerobic digesters or other biological, chemical, thermal, or mechanical processes (alone or in combination) to convert biomass into methane for use as a fuel.
112	H.R. 2055	Consolidated Appropriations Act, 2012	Rep. Culberson, John Abney	12/23/2011: became P.L. 112-74.	The bill prohibited any funds made available in the act or any other act to be used to promulgate or implement any regulation requiring the issuance of permits under Title V of the CAA (42 U.S.C. 7661 et seq.) for CO_2, nitrous oxide, water vapor, or methane emissions resulting from biological processes associated with livestock production.
112	H.R. 199 (S. 231 and S.Amdt. 215 to S. 493 include similar provisions.)	Protect America's Energy and Manufacturing Jobs Act of 2011	Rep. Capito, Shelley Moore	2/1/2011: referred to House subcommittee.	The bill would have suspended, during the two-year period beginning on the date of enactment of the act, any EPA action under the CAA with respect to CO_2 or methane pursuant to certain proceedings, other than with respect to motor vehicle emissions.

Cong.	Bill No.	Bill Title	Sponsor	Last Action	Methane Component
112	H.R. 153	Ensuring Affordable Energy Act	Rep. Poe, Ted	2/1/2011: referred to House subcommittee.	The bill would have prohibited any funds appropriated or otherwise available for the EPA Administrator from being used to implement or enforce (1) a cap-and-trade program, or (2) any statutory or regulatory requirement pertaining to emissions of one or more GHGs, including methane, from stationary sources.
112	H.R. 97 (H.R. 1023, H.R. 1287, H.R. 1292, H.R. 1777, H.R. 3400, H.R. 4301, S. 706, S. 1720, S. 2199, and S. 2365 include similar provisions.)	Free Industry Act	Rep. Blackburn, Marsha	2/1/2011: referred to House subcommittee.	The bill would have amended Section 302(g) of the CAA (42 U.S.C. 7602(g)) by adding "The term 'air pollutant' does not include carbon dioxide, water vapor, methane, nitrous oxide, hydrofluorocarbons, perfluorocarbons, or sulfur hexafluoride." Some similar bills focused solely on the exclusion of agricultural emissions.
112	S. 3443	Robert C. Byrd Mine and Workplace Safety and Health Act of 2012	Sen. Rockefeller, John D., IV	7/25/2012: referred to Senate committee.	The bill would have required the Secretary of Health and Human Services to promulgate regulations requiring that mining equipment used in a coal mine incorporate an atmospheric monitoring and recording device that samples and records the methane, oxygen, carbon monoxide, and coal dust levels in the mine.
111	H.R. 6511	Ensuring Affordable Energy Act	Rep. Poe, Ted	12/9/2010: referred to House committee.	The bill would have prohibited any funds appropriated or otherwise available for the EPA Administrator from being used to implement or enforce (1) a cap-and-trade program, or (2) any statutory or regulatory requirement pertaining to emissions of one or more GHGs, including methane, from stationary sources.
111	H.R. 4753 (S. 3072 includes similar provisions.)	Stationary Source Regulations Delay Act	Rep. Rahall, Nick J., II	3/4/2010: referred to House committee.	The bill would have suspended, during the two-year period beginning on the date of enactment of the act, any EPA action under the CAA with respect to CO_2 or methane pursuant to certain proceedings, other than with respect to motor vehicle emissions.

Cong.	Bill No.	Bill Title	Sponsor	Last Action	Methane Component
111	H.R. 3598	Energy and Water Research Integration Act	Rep. Gordon, Bart	12/1/2009: passed/agreed to in House by voice vote. 12/2/2009: referred to Senate committee.	The bill would have directed the Secretary of Energy to identify each of DOE's energy research, development, and demonstration programs and projects into which it would be appropriate to integrate water considerations. This included developing a strategic plan to evaluate and establish technical milestones for technologies to treat and utilize produced waters discharged from oil, natural gas, coalbed methane, and mining activities, among others.
111	H.R. 3534	Consolidated Land, Energy, and Aquatic Resources Act of 2010	Rep. Rahall, Nick J., II	7/30/2010: passed/agreed to in House by the Yeas and Nays: 209-193, 1 Present (Roll no. 513). 8/4/2010: placed on Senate Legislative Calendar under General Orders.	The bill, as introduced in the House, would have amended the Mineral Leasing Act (30 U.S.C. 201 et seq.) to require any federal coal lease and any modification of an existing coal lease to include terms that establish (1) the inclusion of methane released in conjunction with mining activities within the scope of the lease if the United States owns both the coal and gas resources, (2) a requirement that the lessee recover the associated methane to the maximum feasible extent, (3) a requirement to analyze the extent to which associated methane can be economically captured, and (4) a requirement that any federal coal mine methane resources that are captured and used or sold pursuant to a federal coal lease be subject to a royalty of not less than 12.5%. (These provisions were not included in the bill as reported or engrossed in the House or placed on the Senate calendar.)

Cong.	Bill No.	Bill Title	Sponsor	Last Action	Methane Component
111	H.R. 2454	American Clean Energy and Security Act of 2009	Rep. Waxman, Henry A.	6/26/2009: passed/agreed to in House; passed by recorded vote: 219-212 (Roll no. 477). 7/7/2009: placed on Senate Legislative Calendar under General Orders.	The bill would have set forth provisions concerning clean energy, energy efficiency, reducing global warming pollution, transitioning to a clean energy economy, and providing for agriculture and forestry related offsets. The bill would have required the EPA Administrator to establish a cap-and-trade system for GHG emissions and set goals for reducing such emissions from covered sources by 83% of 2005 levels by 2050. Methane was defined as a GHG, given a GWP of 25, and included in the offset program. Any source category that was responsible for at least 10% of the uncapped methane emissions in 2005 was covered under the program. Methane recovered from landfill gas, wastewater treatment gas, coal mine methane used to generate electricity at or near the mine mouth, and qualified waste-to-energy projects were covered under the program's renewable electricity standard. The bill would have explicitly exempted agriculture from the cap-and-trade program.
111	H.R. 1426 (S. 527 includes similar provisions.)	To amend the Clean Air Act to prohibit the issuance of permits under title V of that Act for certain emissions from agricultural production	Rep. Lucas, Frank D.	3/12/2009: referred to House subcommittee.	The bill would have amended the CAA to prohibit the issuance of permits under Title V of that act for any CO_2, nitrogen oxide, water vapor, or methane emissions resulting from biological processes associated with livestock production.
111	H.R. 1158	Biogas Production Incentive Act of 2009	Rep. Higgins, Brian	2/24/2009: referred to House committee.	The bill would have amended the Internal Revenue Code to allow for an energy tax credit for investment in qualified biogas property. Eligible qualified biogas property was defined as including systems that use anaerobic digesters or other biological, chemical, thermal, or mechanical processes (alone or in combination) to convert biomass into methane for use as a fuel.

Cong.	Bill No.	Bill Title	Sponsor	Last Action	Methane Component
111	H.R. 469	Produced Water Utilization Act of 2009	Rep. Hall, Ralph M.	2/11/2009: passed House on voice vote. 2/12/2009: received in Senate and referred to committee.	The bill would have set forth provisions for the Secretary of Energy to encourage research, development, and demonstration of technologies to facilitate the utilization of water produced in connection with the development of domestic energy resources including coalbed methane, oil, natural gas, or any other substance to be used as an energy source.
111	H.R. 391	To amend the Clean Air Act to provide that greenhouse gases are not subject to the Act, and for other purposes	Rep. Blackburn, Marsha	1/14/2009: referred to House subcommittee.	The bill would have amended Section 302(g) of the CAA (42 U.S.C. 7602(g)) by adding "The term 'air pollutant' does not include carbon dioxide, water vapor, methane, nitrous oxide, hydrofluorocarbons, perfluorocarbons, or sulfur hexafluoride." Some similar bills focused on this definition solely with respect to agricultural emissions.
111	S. 2729	Clean Energy Partnerships Act of 2009	Sen. Stabenow, Debbie	11/4/2009: referred to Senate committee.	The bill would have set forth provisions to establish a program to govern the creation of credits from emission reductions from uncapped domestic sources and sinks. The bill would have required the Secretary of Agriculture and the EPA Administrator to establish a cap-and-trade system for GHG emissions. Methane controls were an eligible offset activity and included collection and combustion projects at mines, landfills, natural gas systems; manure management, composting, or anaerobic digestion; recycling and waste minimization; rice cultivation; and animal management practices including dietary modifications and pasture-based livestock systems. Further, the bill would have exempted the requirement to hold allowances for emissions resulting from the use of gas as an energy source if the gas was derived from a domestic methane offset project. The bill included research and demonstration assistance for approaches to reducing methane emissions associated with agricultural production (including livestock and crop production), including quantification of those reductions.

Cong.	Bill No.	Bill Title	Sponsor	Last Action	Methane Component
111	S. 1733	Clean Energy Jobs and American Power Act	Sen. Kerry, John F.	2/2/2010: reported out of the Committee on Environment and Public Works; placed on Senate Legislative Calendar under General Orders.	The bill would have set forth provisions concerning the reduction of global warming pollution, energy efficiency, renewable energy, water efficiency, green jobs and worker transition, and adaptation to the impacts of climate change. The bill would have required the EPA Administrator to establish a cap-and-trade system for GHG emissions. Methane was defined as a GHG, given a GWP of 25, and included in the offset program. Eligible offset activity included methane collection and combustion projects at active underground coal mines, landfills, oil and natural gas systems, and manure management and biogas facilities.
111	S. 1462	American Clean Energy Leadership Act of 2009	Sen. Bingaman, Jeff	7/16/2009: placed on Senate Legislative Calendar under General Orders.	The bill would have required the Secretary of Energy, in consultation with other appropriate agencies, to support a civilian research program to develop advanced membrane technology that would be used in the separation of gases from applications, including those that pull gases from landfills and separate out methane.

Source: CRS.

Notes: This section was prepared with the assistance of (name redacted), Information Research Specialist . The table lists only those bills that specifically mention "methane." Bills are ordered by Congress, split between the House and the Senate, and arranged by bill number starting with the most recent. If similar language is contained in different bills from the same Congress, the first bill introduced is presented in the table (with the subsequent bill numbers given in parentheses).

Appendix B. Recent Executive Branch Initiatives

A Selected Chronology of Recent Executive Branch Initiatives

June 25, 2013	White House released "The President's Climate Action Plan" (CAP) with a stated goal of "reducing methane emissions" through the development of an interagency strategy and the pursuit of collaborative approaches across the economy.
November 29, 2013	EPA released a Final Rule (FR) to amend the GHG reporting rule to raise the 100-year GWP of methane from 21 to 25, in line with the 2007 IPCC AR4 findings agreed to by parties to the UNFCCC. EPA, "2013 Revisions to the Greenhouse Gas Reporting Rule and Final Confidentiality Determinations for New or Substantially Revised Data Elements, FR," *78 Federal Register* 71903.
March 28, 2014	White House released the "Strategy to Reduce Methane Emissions." The Strategy summarized the sources of methane emissions, committed to new steps to cut emissions, and outlined the Administration's efforts to improve the measurement of these emissions. The Strategy proposed steps to further cut methane emissions from landfills, coal mining, agriculture, and oil and gas systems through both voluntary actions and potential regulatory standards.
April 15, 2014	EPA released the *Inventory of U.S. Greenhouse Gas Emissions and Sinks: 1990-2012*, which reported that U.S. GHG emissions in 2012 totaled 6,526 MMT of CO_2 equivalents, of which 567.3, or about 9%, was methane.
April 15, 2014	EPA released for external peer review five technical white papers on potentially significant sources of methane emissions in the oil and gas sector (pneumatic devices, liquids unloading, well completions, compressors, and leak detection). The white papers focused on technical issues covering emissions and mitigation techniques that target methane and VOCs.
April 28, 2014	BLM released an ANPRM soliciting input on the development of a program to capture, sell, or otherwise dispose of coalbed methane or methane gases that are released from coal or other type of mineral seam into the air during extraction operations. BLM, "Waste Mine Methane Capture, Use, Sale, or Destruction, ANPRM," 79 *Federal Register* 23923.
April 27, 2014	DOE hosted a roundtable under the CAP with representatives of labor and manufacturing organizations to discuss methane emissions from the midstream and downstream natural gas systems.
May 8, 2014	EPA proposed the "Gas STAR Gold" initiative, a program to certify oil and gas facilities that reduce emissions of methane.
May 20, 2014	DOE hosted a roundtable under the CAP with scientists and representatives from environmental groups and other nongovernmental organizations to discuss methane emissions from the natural gas sector.
July 17, 2014	EPA released a Proposed Rule that updated the standards of performance for new municipal solid waste landfills. The proposed limits for new landfills would require operators to capture two-thirds of their methane and air toxics emissions by 2023. EPA, "Standards of Performance for Municipal Solid Waste Landfills," 79 *Federal Register* 41795. EPA released an ANPRM soliciting input on methods to reduce methane and other emissions from existing municipal solid waste landfills. EPA, "Emission Guidelines and Compliance Times for Municipal Solid Waste Landfills," Advance Notice of Proposed Rulemaking, 79 *Federal Register* 41772.
July 25, 2014	EPA's Office of Inspector General (OIG) released a report that stated that EPA "has placed little focus and attention on reducing methane emissions from pipelines in the natural gas distribution sector." EPA OIG, "Improvements Needed in EPA Efforts to Address Methane Emissions From Natural Gas Distribution Pipelines," Report No. 14-P-0324.
July 29, 2014	DOE announced a series of steps aimed at reducing methane emissions from natural

	gas transmission and distribution systems, including setting energy efficiency rules for new natural gas compressors and working with industry on research and development to improve natural gas system efficiency and reduce leaks. DOE, "Factsheet: An Initiative to Help Modernize Natural Gas Transmission and Distribution Infrastructure."
July 31, 2014	USDA released guidance for calculating GHG emissions from agriculture and forestry activities, part of its larger efforts to address agriculture's potential effects on climate change. USDA, "Quantifying Greenhouse Gas Fluxes in Agriculture and Forestry: Methods for Entity-Scale Inventory."
August 1, 2014	USDA, DOE, and EPA released the "Biogas Opportunities Roadmap: Voluntary Actions to Reduce Methane Emissions and Increase Energy Independence," a comprehensive list of programs, funding opportunities, and strategies to increase construction and use of methane-fed biogas reactors in the agriculture, wastewater treatment, landfill, and other sectors in part as a way to create a market for use of the gas.
November 24, 2014	BLM's Notice of Proposed Rulemaking for Onshore Oil and Gas Order 9, Waste Prevention and Use of Produced Oil and Gas for Beneficial Purposes, is placed on the Fall 2014 Unified Agenda with an April 2015 date for the NPRM and an April 2016 date for final action.
December 9, 2014	EPA proposed amendments to subpart W of the Greenhouse Gas Reporting Program that would add reporting of GHG emissions from gathering and boosting systems, completions and workovers of oil wells using hydraulic fracturing, and blowdowns of natural gas transmission pipelines. EPA, "Greenhouse Gas Reporting Rule: 2015 Revisions and Confidentiality Determinations for Petroleum and Natural Gas Systems; Proposed Rule," 79 *Federal Register* 73148.
December 16, 2014	DOE's Advanced Research Projects Agency—Energy office announced $60 million in awarded grants for cutting-edge technology that will detect, locate, and measure methane emissions, among other initiatives.
January 14, 2015	EPA announced a series of steps the agency plans to take in 2015 to address methane emissions from the oil and gas sector, including (1) building on the 2012 NSPS for VOCs to address new and modified activities and equipment in the sector uncovered by the previous rule, (2) extending VOC reduction requirements to existing oil and gas sources in ozone nonattainment areas and states in the Ozone Transport Region (in the form of Control Techniques Guidelines, which states would need to address in their State Implementation Plans), and (3) expanding voluntary efforts under the Natural Gas STAR program.
April 16, 2015	The Federal Energy Regulatory Commission released a policy statement, "Cost Recovery Mechanisms for Modernization of Natural Gas Facilities," which would allow interstate natural gas pipelines to recover the costs of modernizing their facilities and infrastructure to enhance the efficient and safe operation of their systems.
April 21, 2015	DOE released the Quadrennial Energy Review, which called for a competitive program that would provide financial assistance to states to help speed replacement of old natural gas distribution lines. The proposal envisioned "targeted funding to offset incremental costs to low income households, and funding for enhanced direct inspection and maintenance programs," with an estimated costs of $2.5 billion to $3.5 billion over 10 years.
April 22, 2015	DOJ, in a settlement with the natural gas company Noble Energy over alleged Clean Air Act violations, set a precedent for a "basin-wide" approach to curbing emissions from energy extraction, an approach that some believe would aid regulators in implementing further EPA rules regulating methane.
July 13, 2015	BLM released proposed, updated regulations to its Order 3 rulemaking to ensure accurate measurement, accountability, and royalty payments for oil and gas production from federal and Indian leases aimed at preventing theft and loss of the resources. Public comment on the rule ran through September 11, 2015. BLM,

	"Onshore Oil and Gas Operations; Federal and Indian Oil and Gas Leases; Site Security," Proposed Rule, 80 *Federal Register* 40767.
July 23, 2015	EPA released its proposed framework for a revised Natural Gas STAR program for voluntary cuts in methane emissions from existing sources, proposing a program that the agency says included more flexibility for industry, such as company-wide options, than the facility-based approach that the agency was forced to withdraw last year in the face of industry opposition.
August 14, 2015	EPA released a proposed supplement to the 2014 proposed NSPS for new municipal solid waste landfills, "Standards of Performance for Municipal Solid Waste Landfills," and a proposed rule for existing municipal landfills, "Emission Guidelines and Compliance Times for Municipal Solid Waste Landfills." The proposals would set an emissions threshold of 34 metric tons of methane, a level at which landfills would be required to begin capturing emissions of landfill gas, which contains methane and other pollutants. The figure is lower than a 40-ton threshold EPA proposed in 2014 as well as the current NSPS threshold of 50 metric tons.
August 18, 2015	EPA released proposed rules for the oil and gas industry, including (1) proposed updates to the 2012 NSPS that would set methane and VOC requirements for additional new and modified sources in the oil and gas industry; (2) Draft Control Techniques Guidelines, which would target VOC emissions from existing oil and gas sources in certain ozone nonattainment areas and states in the Ozone Transport Region; (3) a proposed source determination rule, which would clarify EPA's air permitting requirements as they apply to the oil and natural gas industry; and (4) a proposed Federal Implementation Plan for EPA's Indian Country Minor New Source Review program for oil and gas production sources.
January 21, 2016	EPA finalized the voluntary "Natural Gas STAR Methane Challenge Program ("Methane Challenge") Best Management Practice (BMP) Commitment Framework" which would provide a new mechanism through which oil and gas companies can make and track commitments to reduce methane emissions. The final version did not include several provisions from the proposal, including a commitment to set interim milestones.
January 22, 2016	BLM released proposed rules to update standards to reduce venting and flaring from oil and gas production on federal lands. The proposal would revise the existing royalty provisions for onshore oil and gas leases as well as set (1) flaring limits on drilling operations, (2) requirements for the submission of pre-drilling gas capture plans, (3) requirements for leak detection and repair, and (4) prohibitions on venting.

Source: CRS.

Note: Initiatives were selected based upon CRS's consideration of significance.

Author Contact Information

(name redacted), Coordinator
Analyst in Environmental Policy
[redacted]@crs.loc.gov, 7-....

(name redacted)
Specialist in Environmental Policy
[redacted]@crs.loc.gov, 7-....

(name redacted)
Specialist in Agricultural Conservation and Natural Resources Policy
[redacted]@crs.loc.gov, 7-....

(name redacted)
Information Research Specialist
[redacted]@crs. loc.gov , 7-....

Acknowledgments

This report was originally co-authored by (name redacted), former CRS Specialist in Energy Policy. The current authors would also like to thank (name redacted), Graphics Specialist, CRS; and James Kidd, Editor, CRS.

EveryCRSReport.com

The Congressional Research Service (CRS) is a federal legislative branch agency, housed inside the Library of Congress, charged with providing the United States Congress non-partisan advice on issues that may come before Congress.

EveryCRSReport.com republishes CRS reports that are available to all Congressional staff. The reports are not classified, and Members of Congress routinely make individual reports available to the public.

Prior to our republication, we redacted names, phone numbers and email addresses of analysts who produced the reports. We also added this page to the report. We have not intentionally made any other changes to any report published on EveryCRSReport.com.

CRS reports, as a work of the United States government, are not subject to copyright protection in the United States. Any CRS report may be reproduced and distributed in its entirety without permission from CRS. However, as a CRS report may include copyrighted images or material from a third party, you may need to obtain permission of the copyright holder if you wish to copy or otherwise use copyrighted material.

Information in a CRS report should not be relied upon for purposes other than public understanding of information that has been provided by CRS to members of Congress in connection with CRS' institutional role.

EveryCRSReport.com is not a government website and is not affiliated with CRS. We do not claim copyright on any CRS report we have republished.